HERITAGE PRESERVATION COMMISSION AGENDA

PUBLIC MEETING ROOM	WEDNESDAY, JANUARY 17, 2024	6:00 PM

1. Call to Order
2. Approval of the Minutes
3. General Heritage Preservation Items
   A. Citizen Comment Period
4. Design Reviews
   A. 216-218 Central Avenue Certificate of Appropriateness and Review of Work Completed
5. Items for Discussion
   A. Boundary Proposal
   B. Relevancy Project
6. Adjournment

HERITAGE PRESERVATION COMMISSION MINUTES

PUBLIC MEETING ROOM	WEDNESDAY, NOVEMBER 15, 2023	6:00 PM

Meeting Items

1. Call to Order

   Chair Temple called the regular meeting of the Heritage Preservation Commission to order at 6:02 p.m. in the 2nd Floor Library of City Hall. This location was due to scheduling conflicts. Present at the meeting were Cori Weems, David Sauer, Ron Dwyer, Colton Hogan and Chair Sam Temple. Also present at the meeting were Mathias Hughey, Community Development Coordinator, Kari Casper, Administrative Assistant II and Joe Varley.

2. Approval of the Minutes

   Motion by Cori Weems, seconded by Coltan Hogan to Approve. Motion Passed.

3. General Heritage Preservation Items

A. Citizen Comment Period

   None.

4. Design Reviews

A. 322 and 324 Central Avenue

   Sauer stated that he was a bit taken aback by the writers' inclusion of diversity in the preservation movement of which groups were, as she put it underrepresented and has a need to amplify those underrepresented groups in preservation.

   Motion by David Sauer, seconded by Ron Dwyer to Approve. Motion Passed.

B. 216 and 218 Central Avenue Update

   The HPC does not approve of the work at 216 & 218 Central Ave. The CoA issued clearly states that the signboards must cover the Concrete Masonry Units (CMU) that were installed and that they must create the appearance of a “square and level façade.” They felt that the sign boards appeared to be off-center and out of level. The HPC feels that they should re-install the signboards to make sure they are level, centered, and cover the CMU. They were supposed to have this work done in June and it took them until October to get it done. Temple inquired if there was a possibility of using the new "Administrative Citation". Hughey stated that he would speak with David Wanberg and update the HPC at the next meeting.

5. Items for Discussion

A. Relevancy Project

Sauer mentioned that he was surprised about the author's mention of the releavancy of the underrepresented groups in the preservation movement. He would be interested in hearing examples of what she was referring to. Stated that in today's climate, do people care about historical preservation? Temple added that by telling you about the various underrepresented groups, maybe that's a way to get people to care.

B. Commissioner Appointments

Both Commissioners, Cori Weems and Ron Dwyer, whose terms are up have submitted applications for renewal.

C. CLG Annual Report

Hughey prepared the reports for the last two years. The board appreciated looking back at the work that has been done in the past.

6. Adjournment

Motion by Coltan Hogan, seconded by David Sauer to adjourn at 7:08 p.m. Motion Passed.

By:_____
Kari Casper, Recording Secretary

HERITAGE PRESERVATION COMMISSION MINUTES

PUBLIC MEETING ROOM	WEDNESDAY, NOVEMBER 15, 2023	6:00 PM

Meeting Items

1. Call to Order

   Chair Temple called the regular meeting of the Heritage Preservation Commission to order at 6:02 p.m. in the 2nd Floor Library of City Hall. This location was due to scheduling conflicts. Present at the meeting were Cori Weems, David Sauer, Ron Dwyer, Colton Hogan and Chair Sam Temple. Also present at the meeting were Mathias Hughey, Community Development Coordinator, Kari Casper, Administrative Assistant II and Joe Varley.

2. Approval of the Minutes

   Motion by Cori Weems, seconded by Coltan Hogan to Approve. Motion Passed.

3. General Heritage Preservation Items

A. Citizen Comment Period

   None.

4. Design Reviews

A. 322 and 324 Central Avenue

   Sauer stated that he was a bit taken aback by the writers' inclusion of diversity in the preservation movement of which groups were, as she put it underrepresented and has a need to amplify those underrepresented groups in preservation.

   Motion by David Sauer, seconded by Ron Dwyer to Approve. Motion Passed.

B. 216 and 218 Central Avenue Update

   The HPC does not approve of the work at 216 & 218 Central Ave. The CoA issued clearly states that the signboards must cover the Concrete Masonry Units (CMU) that were installed and that they must create the appearance of a “square and level façade.” They felt that the sign boards appeared to be off-center and out of level. The HPC feels that they should re-install the signboards to make sure they are level, centered, and cover the CMU. They were supposed to have this work done in June and it took them until October to get it done. Temple inquired if there was a possibility of using the new "Administrative Citation". Hughey stated that he would speak with David Wanberg and update the HPC at the next meeting.

5. Items for Discussion

A. Relevancy Project

Sauer mentioned that he was surprised about the author's mention of the releavancy of the underrepresented groups in the preservation movement. He would be interested in hearing examples of what she was referring to. Stated that in today's climate, do people care about historical preservation? Temple added that by telling you about the various underrepresented groups, maybe that's a way to get people to care.

B. Commissioner Appointments

Both Commissioners, Cori Weems and Ron Dwyer, whose terms are up have submitted applications for renewal.

C. CLG Annual Report

Hughey prepared the reports for the last two years. The board appreciated looking back at the work that has been done in the past.

6. Adjournment

Motion by Coltan Hogan, seconded by David Sauer to adjourn at 7:08 p.m. Motion Passed.

By:_____
Kari Casper, Recording Secretary

Request for Action

TO:	Faribault Heritage Preservation Commission
FROM:	Harry Davis, City Planner Mathias Hughey, Community Development Coordinator
THROUGH:	David Wanberg, Director of Community and Economic Development
MEETING DATE:	January 17, 2024
SUBJECT:	216-218 Central Avenue Certificate of Appropriateness and Review of Work Completed

BACKGROUND:

In February 2023, the Heritage Preservation Commission (HPC) issued a Certificate of Appropriateness (COA) amending previous COAs issued in September 2020 and April 2021 for Darrell Jensen to conduct facade repairs at 216-218 Central Avenue. 216-218 Central Avenue is a three-story building within the Heritage Preservation District (HPD) and a change to the building exterior is subject to Heritage Preservation Commission (HPC) approval.

In October 2023, City Staff received confirmation that the repairs and external modifications are complete. Staff provided an update at the November 2023 meeting and the HPC provided feedback to City Staff that they do not approve of the completed work at 216 & 218 Central Ave. The HPC believes the COA states that the signboards must cover the Concrete Masonry Units (CMU) that were installed and also create the appearance of a "square and level façade." The HPC felt that the sign boards appeared to be off-center and out of level. The HPC feels that the applicant should re-install the signboards to make sure they are level, centered, and cover the CMU. City Staff sent a letter to the applicant in December stating the HPC does not approve the completed repairs and believes the project to be out of conformance with the issued COA. The letter requested the applicant to correct the issues perceived by the HPC or seek an appeal. The applicant submitted an appeal.

In order to approve or deny a submittal, staff and the decision board must apply criteria and make findings so the decision is legally defensible. In addition to establishing findings, creating a public record for decisions is

also critical. In the event of an appeal, City Council can use a resolution or staff report to form the foundation of the discussion and establish facts. If an appeal is taken to the legal system, the resolution(s) adopted by the city will be scrutinized to determine if a city acted reasonably and legally. Additionally, a decision by the HPC (like a COA) sets the bar for City Staff to review and determine progress on exterior modifications. City Staff are taking action necessary with this agenda item to address COA compliance for the completed work at 216-218 Central Avenue.

Based on the attached staff report and Resolution 2024-001, the Community Development Coordinator and City Planner did take the HPC feedback at the November 2023 meeting and found deficiencies with the completed work that are in violation of the COA. Please see the attached documents for additional information.

REQUESTED ACTION:

The Community Development Coordinator and City Planner recommend approval of Resolution 2024-001 rejecting exterior modification made to 216 and 218 Central Avenue and find the modifications not compliant with the Certificate of Appropriateness issued in February 2023. The findings recommended by the Community Development Coordinator and City Planner are listed in Resolution 2024-001 attached to this report.

If the HPC finds the applicant's completed exterior modifications compliant with the February 2023 amended COA, the HPC can continue the item to the next regular meeting and staff can put forward a proposed resolution with findings accepting the modifications and deeming them compliant with the COA.

ATTACHMENTS:

1. Staff Report for 216-218 Central Ave
2. Resolution 2024-001 Reject Exterior Modifications Made to 216 and 218 Central Avenue

Staff Report to the Heritage Preservation Commission

TO:	Planning Commission
THROUGH:	David Wanberg, Community & Economic Development Director
FROM:	Harry Davis, City Planner
MEETING DATE:	January 17, 2024
SUBJECT:	216-218 Central Avenue

Request:
Approve Resolution 2024-001 rejecting exterior modifications made to 216 and 218 Central Avenue.

Background:
In September 2020, Darrell Jensen (Applicant/Owner) applied for a COA to conduct façade repairs to 216-218 Central Avenue. 216-218 Central Avenue is a three-story building within the Heritage Preservation District (HPD) and a change to the building exterior is subject to Heritage Preservation Commission (HPC) approval. For a full timeline of events up until the amended Certificate of Appropriateness (COA) issued in February of 2023, please see the attached Resolution 2024-001.

In February 2023, the HPC issued a COA amending previous COAs issued in September 2020 and April 2021. Discussion at the February 2023 HPC meeting included the following text and images submitted by the applicant and included (as a summary) in the staff report (see Exhibit C in Resolution 2024-001 for full documents):

1. The CMU will remain (removing it presents a significant structural risk to the integrity of the structure).
2. The CMU, crooked I-beams, and crooked transom windows will be covered with a [semi-permanent] sign board designed and installed to create the appearance of a square and level facade.
3. The sign boards are subject to the downtown sign ordinance, and any exceptions required to meet the intent of disguising the CMU and crooked elements would need to be identified in the application.
4. All appropriate facade elements, including but not limited to the sign boards, windows, window hoods, trim, and cornice will be made or painted to match in color.

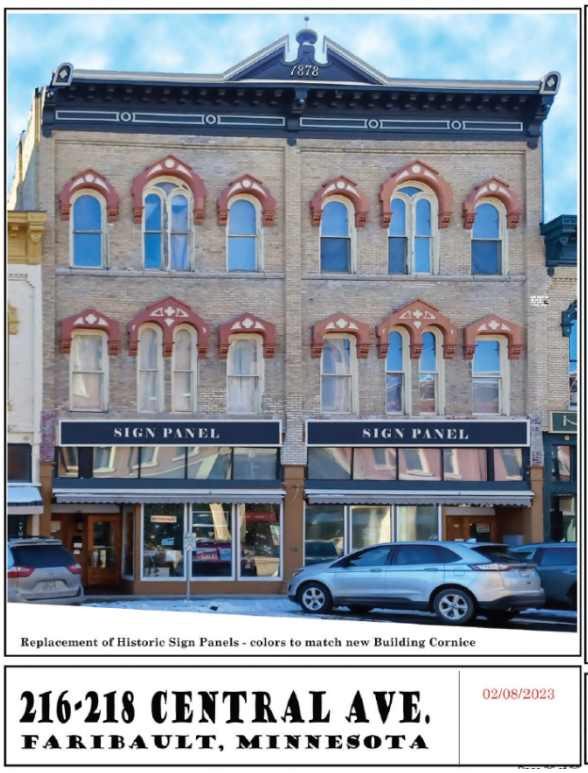

On February 16, City Staff sent the property owner a letter to confirm the COA amendment granted by the HPC. The letter included the following conditions of approval (see Exhibit C in Resolution 2024-001 for full documents):

1. Install signboards above the 216 and 218 Central Avenue transom windows:
    a. Prepare detailed plans, including materials, dimensions, and flashing. Ensure that the signboards minimize the uneven appearance of the existing transom windows and steel beams above the transom windows. Provide a raised border on all sides of the signboards, and paint the signboards to match the paint on the existing cornice. The Community Development Coordinator must verify in writing that the proposed signboards meet the intent of the HPC's certificate of appropriateness. […]
2. No brick is to be painted or repainted, and no further cleaning is recommended.
3. Obtain sign permits before installing signs on the signboards or elsewhere on the building.
4. Paint all window trims to match the paint on the existing cornice. The Community Development Coordinator must verify in writing that the proposed painting meets the intent of the HPC's certificate of appropriateness.

In October 2023, City Staff received confirmation that the repairs and external modifications are complete. Staff provided an update at the November 2023 meeting (see Exhibit D in Resolution 2024-001 for full

documents) and initiated the following discussion and questions:

"The commission may discuss the final product and process. Does the final product meet the intent of the Heritage Preservation Commission's Certificate of Appropriateness? If the goal of the HPC process is compliance with design guidelines and the preservation of a historical aesthetic, how successful was this process? Are there areas where the process could be improved?"

At the November 2023 meeting, the HPC provided feedback to City Staff that they do not approve of the completed work at 216 & 218 Central Ave. The HPC believes the COA states that the signboards must cover the Concrete Masonry Units (CMU) that were installed and also create the appearance of a "square and level façade." The HPC felt that the sign boards appeared to be off-center and out of level. The HPC feels that the applicant should re-install the signboards to make sure they are level, centered, and cover the CMU. City Staff sent a letter to the applicant in December stating the HPC does not approve the completed repairs and believes the project to be out of conformance with the issued COA. The letter requested the applicant to correct the issues perceived by the HPC or seek an appeal. The applicant submitted an appeal (see Exhibits attached to Resolution 2024-001).

Discussion:

Approvals and Denials of a Certificate of Appropriateness. When reviewing proposals for approval or denial, especially those by a public body, the decision must be supported by findings. Findings in development and zoning actions are typically generated by applying legal standards found in zoning code. The Unified Development Ordinance (UDO) does refer to and include guidelines and criteria for a certificate of appropriateness (Sec 13-330) by way of adopting the following materials:

- Secretary of the Interior's Standards for the Treatment of Historic Properties
- Secretary of the Interior's Standards for Treatment of Historic Properties with Guidelines for Preserving, Rehabilitating, Restoring, and Reconstructing Historic Buildings
- City of Faribault's 'Downtown Design Guidelines'

The two documents from the Secretary of the Interior primarily function as construction, restoration, or design guidelines and either imply that meeting the guidelines are grounds for approving a COA or omit any clear COA criteria to allow local governments room to review and approve as seen fit. In the absence of clarity from the Secretary of the Interior documents, City Staff sees Faribault's 'Downtown Design Guidelines', Appendix, Section A as the closest to an established list of criteria applicable to approving or denying COAs. Section A summarizes the Secretary of Interior standards through ten principles with the intent "to help preserve the distinctive character of a historic building and its site, while allowing for reasonable change to meet new needs. The Standards are applied to projects in a

reasonable manner, taking into consideration economic and technical feasibility". The city seeks to apply an appropriate level of discretion and use relevant standards in a reasonable fashion for all development decisions. Please see Resolution 2024-001 for the list of principles to be used as criteria for approving or denying a COA.

In addition to establishing findings, creating a public record for decisions is also critical. In the event of an appeal, City Council can use a resolution or staff report to form the foundation of the discussion and establish facts. If an appeal is taken to the legal system, the resolution(s) adopted by the city will be scrutinized to determine if a city acted reasonably and legally.

Enforcement of a Certificate of Appropriateness. In general, the City Planner is responsible for administering much of the UDO and has the power to determine development compliance with applicable requirements (Sec 2-60). For properties within the HPD, some of these duties are shared with the HPC, who has "such powers and duties as shall be provided in this section with respect to the establishment and regulation of properties within the Heritage Preservation District" (Sec 13-280). Section 13-330, titled 'Certificate of appropriateness' has a number of subsections where the HPC, City Staff, and applicant work together on COAs:

- Subsection A requires a COA issued by the HPC prior to commencing exterior modifications or repairs to buildings.
- Subsection E requires the Building Official forward building permits within the HPD to the Community & Economic Development Director, who then makes a recommendation on the project to the HPC.
- Subsection G allows the Building Official to approve a building permit only after the COA is approved.
- Subsection H states the responsibility for complying with Secretary of Interior standards and the Downtown Design Guidelines are on the applicant to demonstrate and verify for City Staff and the HPC.

In addition to Section 13-330, Section 13-350 states "After a certificate of appropriateness has been issued, and a building permit has been granted to commence work, the Community Development Director, Building Official, or their designee, may from time to time inspect the work authorized and take any action necessary to ensure compliance with the approved plans."

In summary, the HPC is critical to the beginning of a development or exterior modification within the HPD, the applicant proves compliance with guidelines and standards set by the Secretary of the Interior, and the issued COA sets the bar for City Staff to review and determine progress on exterior modifications.

216-218 Compliance with February 2023 Certificate of Appropriateness. Based on discussion from the last HPC meeting in November 2023, City Staff received feedback from the HPC stating the completed work did not address the issued COA. The signboards must cover the Concrete Masonry Units

(CMU) that were installed and also create the appearance of a “square and level façade.” The HPC felt that the sign boards appeared to be off-center and out of level

To provide a look at the approved COA versus the completed work, staff placed the projected look from the COA and elevation drawing alongside the completed work:

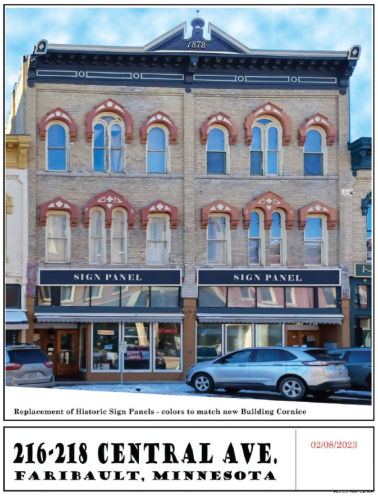

When comparing the images side-by-side, the completed repairs (middle image) looks very similar to the images submitted by the applicant in the amended COA (both end images). The areas of concern for the HPC appear to be in two areas of the façade:

Area A

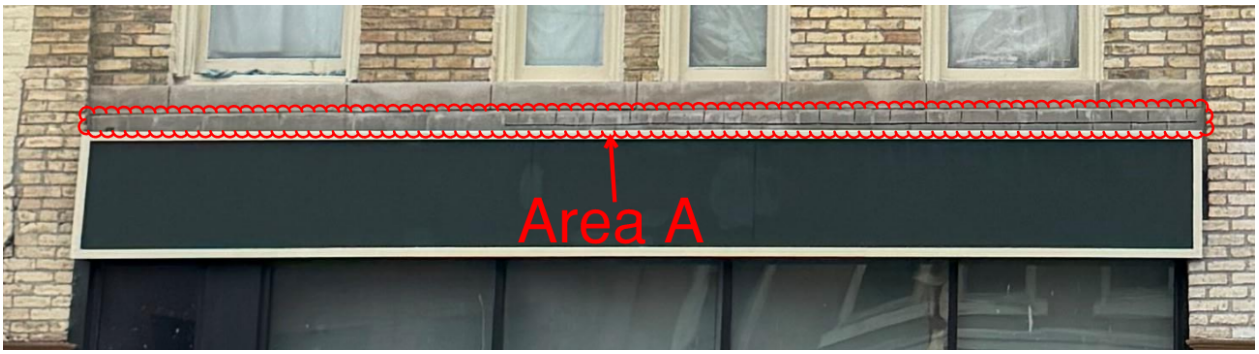

In the area depicted above, the CMU scored to appear like brick is visible over the top of the sign. After the HPC issued the February 2023 COA, the staff report and confirmation follow-up letter to the applicant both included language on the sign boards covering the CMU.

Area B

In the area depicted above, there are two some-what related issues. The gap between the right-side sign board and the central column appears to be larger than the left-side sign board gap. This lead the HPC to think the sign board is not centered. The line along the top of the right-side sign board going to the left is meant to indicate how the left and right sign boards line up on the façade in an effort to project a "square and level façade". The misalignment is faint in the image above, but the sign boards edges do not align and both sign boards contribute to the façade appearing uneven.

When you compare the two areas outlined above with the drawings submitted by the applicants, the sign panels appear to be aligned on the façade, cover the CMU, and sit below the window lintels.

The above issues were noted at the last HPC meeting in November 2023 and staff prepared a resolution for the January 2023 HPC meeting to:

- Provide legal criteria and findings supporting the HPC's decision
- Commence the period for the applicant to potentially appeal the HPC decision
- Serve as the foundation for City Council review (and public record for any court review afterward)

Recommendation:

The Community Development Coordinator and City Planner recommend approval of Resolution 2024-001 rejecting exterior modification made to 216 and 218 Central Avenue and find the modifications not compliant with the Certificate of Appropriateness issued in February 2023. The findings recommended by the Community Development Coordinator and City Planner are listed in Resolution 2024-001 attached to this report.

If the HPC finds the applicant's completed exterior modifications compliant with the February 2023 amended COA, the HPC can continue the item to the next regular meeting and staff can put forward a proposed resolution with findings accepting the modifications and deeming them compliant with the COA.

Attachments:

- Resolution 2024-001

State of Minnesota
County of Rice

CITY OF FARIBAULT

RESOLUTION #2024-001

REJECT EXTERIOR MODIFICATIONS MADE TO 216 AND 218 CENTRAL AVENUE

WHEREAS, Darrell Jensen (the "Applicant") requested in September of 2020 approval for stabilizing the central column on the front façade, including foundation stabilization, replacement of transom windows, and replacing brick at 216 and 218 Central Avenue (the "Subject Property"). The Heritage Preservation Commission approved the request and issued a Certificate of Appropriateness with written details and additional information submitted by the Applicant, combined and attached as Exhibit A; and

WHEREAS, the Applicant requested an amendment to the Certificate of Appropriateness in April of 2021, by request of the Applicant's consultant engineer Larson Engineering, to expand repairs to other structurally-deficient areas of the front façade, including tuckpointing and the top parapet wall. The Heritage Preservation Commission approved the amendment with written details and additional information submitted by the applicant, combined and attached as Exhibit B; and

WHEREAS, the Applicant attempted to make repairs in between April of 2021 and October of 2022. During the attempt to repair the façade, brick improperly tied to the building began falling, which triggered the Applicant's contractor to make emergency repairs by substituting areas of brick with concrete block scored to appear like brick; and

WHEREAS, City Staff became aware of the change in October of 2022 and the contractor informally submitted an amendment to the

Certificate of Appropriateness for consideration at the October 2022 Heritage Preservation Commission meeting; and

WHEREAS, an attorney at the October 2022 meeting, speaking on behalf of the Applicant, indicated the emergency repairs resulting in installation of concrete block and request for amendment to the Certificate of Appropriateness were not on behalf of the Applicant; and

WHEREAS, the Heritage Preservation Commission continued reviewing the informal amendment and stated feedback and concerns about the repairs regarding remaining façade integrity, disqualification from historic tax credits, and submission of a formal application to amend the scope of work; and

WHEREAS, the Applicant's contractor attended the following Heritage Preservation Committee meeting in November 2022 to discuss the emergency repairs and change of scope; and

WHEREAS, City Staff received a letter in late December 2022 from the Applicant's consultant engineer Larson Engineering and said letter was presented at the January 2023 Heritage Preservation Meeting stating no concern for the use of concrete block to stabilize the facade; and

WHEREAS, the Heritage Preservation Commission at the February 2023 meeting reviewed the formal application from the Applicant for an amendment to the Certificate of Appropriateness and approved the request with written details and additional information submitted by the applicant and a city staff report, combined and attached as Exhibit C; and

WHEREAS, City Staff updated the Heritage Preservation Commission at the July 2023 meeting on improvements to the façade at the Subject Property stating the Applicant applied to install sign boards covering the concrete block; and

WHEREAS, City Staff were notified in October 2023 that repairs are completed to the Subject Property façade and updated the Heritage Preservation Commission at the November 2023 meeting, combined and attached as Exhibit D; and

WHEREAS, the Heritage Preservation Commission at the November 2023 meeting reviewed and commented upon the update and completed repairs, stating the improvements are inconsistent with the issued

Certificate of Appropriateness. Approval of the concrete block in the Certificate of Appropriateness is contingent on using a sign board to cover said block and appear square and level with the façade. The minutes from the November 2023 meeting are attached as Exhibit E; and

WHEREAS, as noted in Exhibit E, the Heritage Preservation Commission Chair requested city staff explore avenues for enforcement; and

WHEREAS, staff sent a letter to the Applicant in early December 2023 conveying the Heritage Preservation Commission's determination that the repairs do not conform to the issued Certificate of Appropriateness. Staff requested the applicant correct the issues perceived by the Heritage Preservation Commission or seek an appeal. attached as Exhibit F; and

WHEREAS, the Applicant did submit a letter appealing the request in late December 2023, attached as Exhibit G; and

WHEREAS, prior to appealing the request, the Heritage Preservation Commission must make findings, either in favor of the project or rejecting the repairs and improvements, prior to the applicant initiating a formal appeal process; and

WHEREAS, City of Faribault Unified Development Ordinance, Chapter 13, Article 3, Section 13-330 titled 'Certificate of appropriateness', Subsection H, states 'guidelines and criteria for certificate of appropriateness'; and

WHEREAS, Section 13-330, Subsection H states " […] the Heritage Preservation Commission shall be guided by the 'Secretary of the Interior's Standards for the Treatment of Historic Properties', the 'Secretary of the Interior's Standards for Treatment of Historic Properties with Guidelines for Preserving, Rehabilitating, Restoring, and Reconstructing Historic Buildings', and the City of Faribault's 'Downtown Design Guidelines', each adopted herein by reference. It shall be the responsibility of the applicant to demonstrate compliance with the standards of the above referenced documents"; and

WHEREAS, the documents referenced in the 'whereas' above do not include a required set of criteria for approving or denying Certificates of Appropriateness. Each document establishes recommendations and

guidelines for reviewing appropriate changes to properties within historic districts and national register dtructures; and

WHEREAS, the City of Faribault's 'Downtown Design Guidelines', Appendix A, is the closest to establishing a list of criteria applicable to projects approved through a Certificate of Appropriateness; and

WHEREAS, City of Faribault's 'Downtown Design Guidelines', Appendix, Section A, summarizes Secretary of Interior standards through ten principles with the intent "to help preserve the distinctive character of a historic building and its site, while allowing for reasonable change to meet new needs. The Standards are applied to projects in a reasonable manner, taking into consideration economic and technical feasibility"; and

WHEREAS, the Heritage Preservation Commission denies the completed work at 216-218 Central Avenue and find the project does not comply with the issued Certificate of Appropriateness (Exhibit C), based on the ten principles used as standards in City of Faribault's 'Downtown Design Guidelines', Appendix, Section A, with associated findings:

1. **A property shall be used for its historic purpose or be placed in a new use that requires minimal change to the defining characteristics of the building and its site and environment.**

   Finding: The property is not changing use. No changes in the scope of work, which is façade repair and placement of sign boards, are related to a change in use. The completed repairs are not specifically for a new building use.

2. **The historic character of a property shall be retained and preserved. The removal of historic materials or alteration of features and spaces that characterize a property shall be avoided.**

   Finding: The scope of work and amended Certificate of Appropriateness showed concrete blocks completely obscured by well-placed and leveled sign boards. The completed repairs

are not compliant with the Certificate of Appropriateness and impact the historic character of the façade through visible concrete blocks and misaligned sign boards.

3. **Each property shall be recognized as a physical record of its time, place, and use. Changes that create a false sense of historical development, such as adding conjectural features or architectural elements from other buildings, shall not be undertaken.**

   Finding: The scope of work in the proposal uses sign boards to cover added concrete block. The proposed sign boards are not out of character for the building's history.

4. **Most properties change over time; those changes that have acquired historic significance in their own right shall be retained and preserved.**

   Finding: The proposed scope of work for the project does not include any elements altered over time that have their own significance.

5. **Distinctive features, finishes, and construction techniques or examples of craftsmanship that characterize a historic property shall be preserved.**

   Finding: The completed repairs detract from the overall features and craftsmanship of the building façade, thereby compromising its historic value. Misaligned sign boards that do not cover the concrete block detract from the historic property by contributing to and accentuating the façade's slumped appearance. While the sign boards are not meant to fix the slant seen on the façade, they are intended to give the appearance of a straighter and more-level building front. The sign boards as they are now do not accomplish this intent.

6. **Deteriorated historic features shall be repaired rather than replaced. Where the severity of deterioration requires replacement of a distinctive feature, the new feature shall match the old in design, color, texture, and**

other visual qualities and, where possible, materials. Replacement of missing features shall be substantiated by documentary, physical, or pictorial evidence.

Finding: The proposed scope of work in the latest-issued Certificate of Appropriateness allowed the use of concrete block to stabilize the front façade of the subject property. The scope of work included painting and scoring the concrete block to appear like brick. The use of a sign board to help mask the concrete block was also approved.

7. **Chemical or physical treatments, such as sandblasting, that cause damage to historic materials shall not be used. The surface cleaning of structures, if appropriate, shall be undertaken using the gentlest means possible.**

   Finding: The original scope of work for the project did include restoration of the façade and did not include any harsh methods of treating brick or other materials.

8. **Significant archeological resources affected by a project shall be protected and preserved. If such resources must be disturbed, mitigation measures shall be undertaken.**

   Finding: The proposed and completed repairs to the project do not impact any significant archeological resources on the property or nearby.

9. **New additions, exterior alterations, or related new construction shall not destroy historic materials that characterize the property. The new work shall be differentiated from the old and shall be compatible with the massing, size, scale, and architectural features to protect the historic integrity of the property and its environment.**

   Finding: The completed repairs and new sign boards do not contribute to the historic integrity of the property by accentuating the "slump" visible on the façade through misaligned sign board placement.

10. **New additions and adjacent or related new construction shall be undertaken in such a manner that if removed in the future, the essential form and integrity of the historic property and its environment would be unimpaired.**

    Finding: While the sign boards are not meant to fix the slant seen on the façade, they are intended to give the appearance of a straighter and more-level building front. The sign boards as they are now do not accomplish this intent and therefore detract from the essential form and integrity of the property.

WHEREAS, based on the City Staff report and written findings, the Heritage Preservation Commission concurs with the findings of City Staff and makes identical findings.

NOW, THEREFORE, BE IT RESOLVED BY THE HERITAGE PRESERVATION COMMISSION OF THE CITY OF FARIBAULT, MINNESOTA, AS FOLLOWS:

Section 1: Reject Completed Repairs to 216-218 Central Avenue. The Heritage Preservation Commission hereby rejects the Applicant's completed repairs to 216-218 Central Avenue.

Section 2: Determination of Non-compliance with Certificate of Appropriateness. The Heritage Preservation Commission hereby determines the repairs completed do not comply with the Applicant's Certificate of Appropriateness. As such, the Certificate of Appropriateness shall be revoked.

Section 3. Findings and Incorporation of Recitals and Exhibits. Where applicable, the recitals and exhibits incorporated in this resolution constitute the written findings of the Heritage Preservation Commission, all of which contribute to the protection, enhancement, and promotion of the community's historical, architectural and cultural resources.

Section 4. Request to take Additional Steps. The Heritage Preservation Commission requests the City Council, Mayor, City

Administrator, City Staff, and the City's Consultants to take any additional steps and actions necessary or convenient to accomplish the intent of this resolution.

Section 5. Effective Date. This resolution shall be effective upon passage.

Date Adopted: XXXX XX, 2024

Faribault City Council

_____

Kevin F. Voracek, Mayor

ATTEST:

_____

Timothy C. Murray, City Administrator

Exhibit A

Certificate of Appropriateness
September 2020

Heritage Preservation Commission

CERTIFICATE OF APPROPRIATENESS

216-218 Central Avenue

I hereby certify that the Heritage Preservation Commission has reviewed the below-described project and found the work proposed by the applicant to meet or exceed the design guidelines established by the City of Faribault.

The design features approved by the Heritage Preservation Commission are to be considered a condition of the building permit issued by the City of Faribault as stipulated in the Code of Ordinances.

COMMUNITY & ECONOMIC DEVELOPMENT DIRECTOR

Deanna Kuennen, Community and Economic Development Director

Brief Description of Project:

Contractor will be stabilizing the central column on the front (east) façade of the building. The work includes dismantling and rebuilding the center column, stabilizing concrete work to the foundation and removal and replacement of 2 transom windows (one on each side of the column). Two beams will be secured in place, but cannot be raised because the entire building has "drifted". Replacement brick to match as closely as possible the size, color, texture, joint width, etc. of the existing brick. If the existing transom windows cannot be reused, new transom windows will be installed that are of the same dimension, profile, glass, reflectiveness, etc. as the existing windows.

The contractor should reuse the steel column veneer instead of replacing it with brick. If the steel veneer cannot be reused, a fypon (or similar material) replica of the same size, configuration, profile, detail, etc. must be fabricated and installed.

Date of Heritage Preservation Commission Review: 21 September 2020
Certificate of Appropriateness Issued: 22 September 2020

Copies forwarded to:
Building Official: XX
Property Owner: XX
Site File: XX

DESIGN REVIEW APPLICATION FORM

Heritage Preservation Commission

Owner / Applicant: Darrell Jensen/Restoration Services

Mailing Address: 216-218 Central Ave

City/ State: Faribault, MN 55021

Telephone Number: 612-916-0808 (Rick Thomas)

Work Site Address: 216-218 Central Avenue

Site File Number: _____

Type of Work:				
	Restoration	XX	Remodeling	_____
	New Construction	_____	Site Improvements	_____
	Demolition	_____		

Brief Description of Project:

Restoration Services will be stabilizing the central column on the front (east) façade of the building. The work includes dismantling and rebuilding the center column, stabilizing concrete work to the foundation, removal and replacement of 2 transom windows (one on each side of the column). Two beams will be secured in place, but cannot be raised because the entire building has “drifted”. Replace brick with brick to match as closely as possible the size, color, texture, joint width, etc.

Applicable City of Faribault Commercial Historic District Design Guidelines:

General – Establishing the Area of Work

Tertiary or Rear Façades

a. Rear facades on buildings typically face an alley or the rear of another building. Changes to these areas will be reviewed on a case-by-case basis.
b. Entrances on the rear should clearly be secondary entrances and the design should avoid a false historicism. The entrances should be transparent, promoting visibility from inside and outside.

Windows and Doors

1. Openings
   a. Existing window and door openings shall be retained. Original openings that have been covered or blocked in should be re-opened when feasible.
   b. New window and door openings should not be introduced into the primary elevation(s).
   c. Blocking down (reducing) or enlarging window or door openings to fit a

stock window sash or new stock door sizes should not be done.

d. Constructing new openings may be permissible on secondary facades if the opening follows the same proportions of adjacent doors and windows.

2. Panes, Sashes and Hardware
   a. Original windows, doors and hardware shall be retained where possible.
   b. The stylistic period or periods a building represents shall be respected. Replacement is acceptable if elements are no longer reparable and/or functioning properly. New windows for replacement or missing windows should match the original in material, size, general muntin and mullion proportion and configuration and reflective qualities of the glass. Different materials may be acceptable on a case-by-case basis. Replacement sash should not alter the setback relationship between window and wall.

Awnings and Canopies

Awnings and canopies provide a good opportunity for building signage and identification.

1. Awnings should have a traditional shape such as a tent shape or be rounded with the opening is arched.
2. Aluminum or plastic awnings should not be used. Lettering should be of a scale and design that is appropriate to the building.
3. If a storefront is divided into three parts there should be a separate awning for each section.
4. Operable awnings are preferred.

Attachments:	Historical Data / Site File Information	XX
	Photographs	XX
	Detailed Drawings of Proposed Modifications	XX
	Site Plan	
	Manufacturers Specifications	
	Material Samples / Color Samples	XX

Action of HPC Board: Meeting Date: 21 September 2020
Action Taken: 22 September 2020

Certificate of Appropriateness: Issued: _____
Denied: _____

Exhibit B

Certificate of Appropriateness
April 2021

Heritage Preservation Commission

CERTIFICATE OF APPROPRIATENESS

216-218 Central Avenue

I hereby certify that the Heritage Preservation Commission has reviewed the below-described project and found the work proposed by the applicant to meet or exceed the design guidelines established by the City of Faribault.

The design features approved by the Heritage Preservation Commission are to be considered a condition of the building permit issued by the City of Faribault as stipulated in the Code of Ordinances.

Kim Clausen

Kim Clausen, Community Development Coordinator

Brief Description of Project:

The property owner is proposing to tuckpoint and repair the structurally-deficient areas of the front façade at 216-218 Central Avenue. The scope of work includes:

- Install helical bars in the joint space of all significant step cracks
- Remove and replace limestone window sills and install new flashing
- Clean existing brick, tuckpoint with Type N Mortar and replace broken and damaged brick
- Remove and reinstall brick between the lintel and the window sills. Straighten/reinstall brick and install new flashing at lintel.

In addition, the metal cornicework that was removed earlier will be repaired and reinstalled. A new replica trim piece will be created to replace the missing piece on the north end of the cornice.

The HPC has approved this scope of work for the areas above the I-beam. No work has been reviewed or approved for changes at or below the I-beam, including changes to the transom windows, storefront, or addition of MDO.

Date of Heritage Preservation Commission Review: 19 April 2021
Certificate of Appropriateness Issued: _____

Copies forwarded to:

Building Official:	XX
Property Owner:	XX
Site File:	XX

DESIGN REVIEW APPLICATION FORM

Heritage Preservation Commission

Owner / Applicant: Darrell and Luella Jensen

Mailing Address: 216-218 Central Ave

City/ State: Faribault, MN 55021

Telephone Number: 612-483-0367

Work Site Address: 216-218 Central Ave

Site File Number: 431

Type of Work: Restoration XX Remodeling XX
New Construction ____ Site Improvements ____

Brief Description of Project:

The property owner is proposing to tuckpoint and repair the structurally-deficient areas of the front façade at 216-218 Central Avenue. The scope of work includes:

- Install helical bars in the joint space of all significant step cracks
- Remove and replace limestone window sills and install new flashing
- Clean existing brick, tuckpoint with Type N Mortar and replace broken and damaged brick
- Remove and reinstall brick between the lintel and the window sills. Straighten/reinstall brick and install new flashing at lintel.

In addition, the metal cornicework that was removed earlier will be repaired and reinstalled. A new replica trim piece will be created to replace the missing piece on the north end of the cornice.

Applicable City of Faribault Commercial Historic District Design Guidelines:

A. Masonry and Walls

1. Original Material
   a. Original materials such as brick, stone and mortar shall be retained.
   b. Historic masonry walls allowed for the transmittance of water and water vapor to properly function. Surface treatments such as breathable and non-breathable water proofing, sealants and consolidants shall be avoided as they will trap pollutants, debris and water within the masonry and accelerate deterioration.

c. When repair or replacement of masonry is required, a similar material shall be used.
d. New masonry added to the structure or site, such as new foundations or retaining walls, shall be compatible with the color, texture and bonding pattern of original or existing masonry.

2. Cleaning
   a. Masonry shall be cleaned only when necessary to halt deterioration or to remove graffiti and stains, and always with the gentlest method possible such as low-pressure water (100-300 psi) and soft-bristly brushes.
   b. Brick and stone surfaces should not be sandblasted. Other dry or wet grit abrasive blasting should not be undertaken. These abrasive methods of cleaning erode the hard surface of the material and accelerate deterioration.
   c. There are mild detergents and chemical cleaners available that are compatible with certain types of masonry, however, such products which could have an adverse chemical reaction with the masonry material, such as acid on limestone or marble, should not be used.

3. Repointing

Historically, one of the primary functions of mortar was to provide a drainage path for water that gets into a wall assembly. Typically older mortar was sand and lime mixed with water to create a blend of high porosity and permeability, or interconnected holes. The high porosity and permeability of the mortar allowed water to pass through and better absorbed the stress of freeze-thaw action. Newer mortar mixes contain a large amount of Portland cement, which increases workability and in some cases strength, but decreases the porosity and permeability and therefore the ability of the mortar to allow water to drain out of the wall.

   a. When repointing, it is imperative to match the joint size, profile, color, ingredients porosity and permeability of the original mortar. Using an incompatible mortar for repointing may result in spalling brick, efflorescence, and accelerated deterioration.
   b. Repointing should be done on mortar joints where there is evidence of moisture problems or when sufficient mortar is missing to allow water to stand on the joint.
   c. The use of pneumatic hammers, grinders and saws to remove mortar can seriously damage the adjacent brick. Enlist the services of a qualified restoration professional for this activity.

B. Lintels, Arches and Sills

1. Lintels, sills, architraves, pediments, hoods and steps shall be retained and repaired if possible.
2. These elements should not be introduced unless there is archival evidence suggesting their presence and design.

C. Roofs, Cornices and Details

Downtown Faribault facades are typically finished by a cornice or other strong horizontal elements.

1. Whenever possible, existing cornices and brackets shall be retained and restored.
2. In the event a cornice is deteriorated beyond repair or is missing, it should be replaced with materials that match the original in design, color, texture, and other visual qualities or is appropriate to the style of the building.
3. The original roof shape shall be preserved.

Attachments:	Historical Data / Site File Information	XX
	Photographs	XX
	Detailed Drawings of Proposed Modifications	XX
	Site Plan	
	Manufacturers Specifications	
	Material Samples / Color Samples	

Action of HPC Board:	Meeting Date:	19 April 2021
	Action Taken:	

Certificate of Appropriateness:	Issued:	
	Denied:	

PHASE II GENERAL NOTES:

1. CONTRACTOR TO CLEAN & TUCK POINT EXISTING BRICK AS REQUIRED.
2. CLEAN & RE-PAINT EXISTING METALWORK @ PARAPET. RE-MANUFACTURE METALWORK BEYOND. REPAIR AS REQUIRED.
3. FUTURE TRANSOM WINDOW DIMENSIONS TO BE FIELD VERIFIED AFTER NEW TREATED BUCK FRAMING IS IN PLACE.
4. NOTIFY ARCHITECT IF CONDITIONS ARE DIFFERENT THAN SHOWN. SOME CONDITIONS ARE ASSUMED.
5. CONTRACTOR TO ATTEMPT TO INSTALL NEW LIMESTONE SILL BLOCK AS LEVEL (VISUAL & ACTUAL) AS POSSIBLE WITHOUT DISRUPTING EXISTING MASONRY ABOVE.

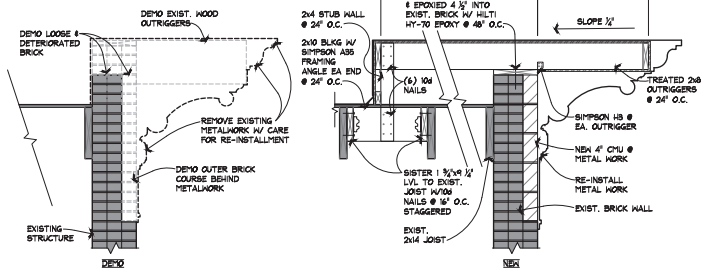

3 A1.0 PARAPET RECONSTRUCTION DETAIL
SCALE: 3/4" = 1'-0"

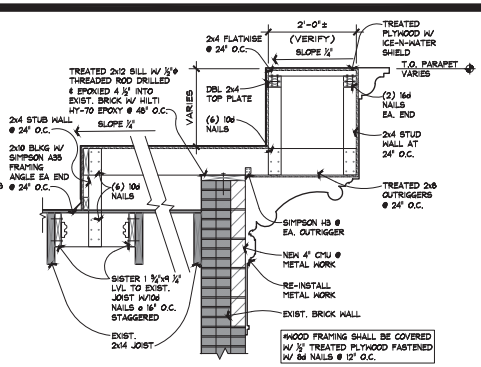

4 A1.0 PARAPET PEAK DETAIL
SCALE: 3/4" = 1'-0"

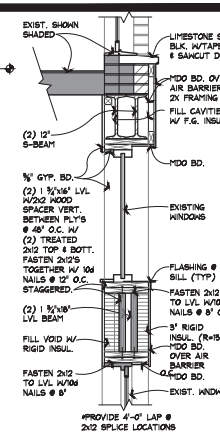

5 A1.0 SILL DETAIL
SCALE: 3/4" = 1'-0"

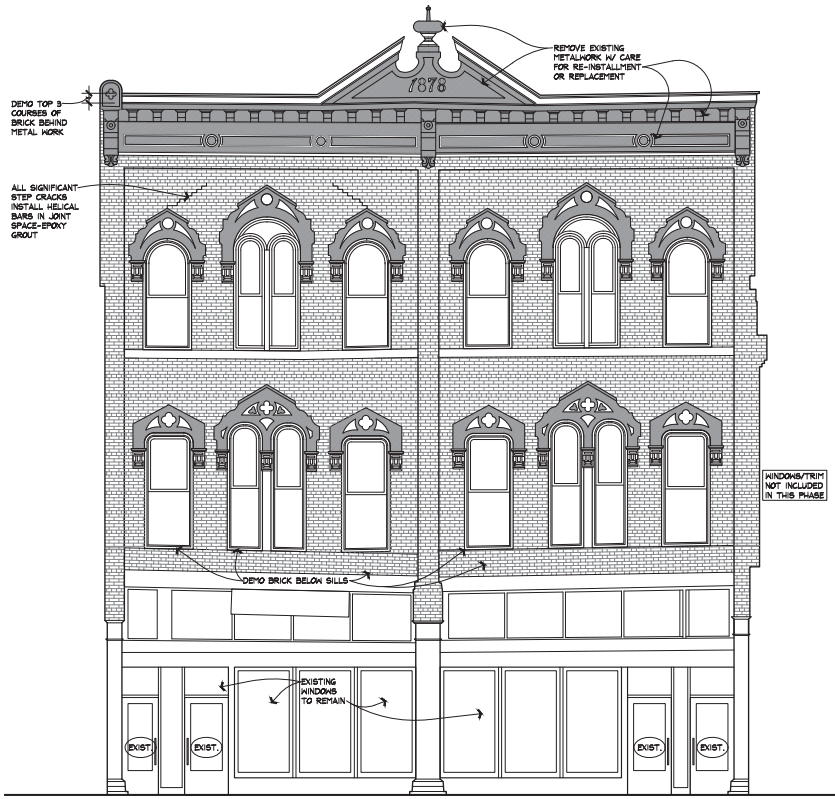

1 A1.0 EAST ELEVATION - EXISTING / DEMOLITION
SCALE: 1/4" = 1'-0"

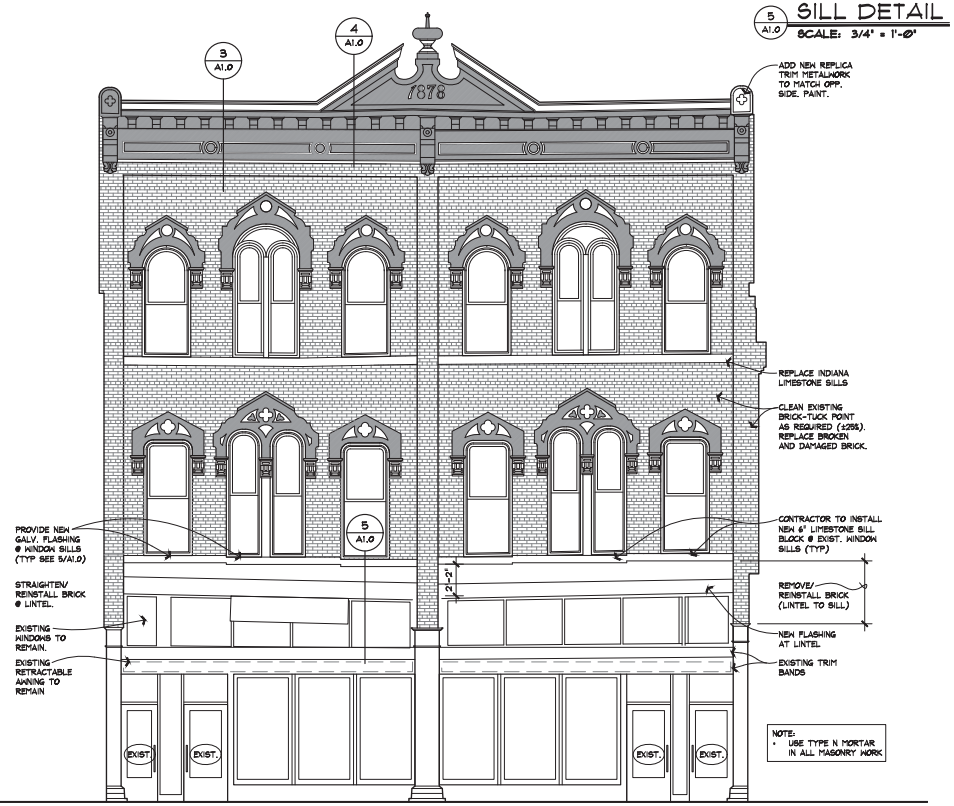

NOTE:
- USE TYPE N MORTAR IN ALL MASONRY WORK

2 A1.0 EAST ELEVATION - PROPOSED RENOVATION
SCALE: 1/4" = 1'-0"

© All drawings and content copyright DJ Medin Architects, Inc.

DESIGNED	DJM
DRAWN	NES/LMM
CHECKED	DJM
PROJECT	20006
REVISIONS	

I hereby certify that this plan, specification or report was prepared by me or under my direct supervision and that I am a duly licensed architect under the laws of the state of Minnesota. (architectural only)

DAVID J. MEDIN

License No. 4848

Date Mar 26, 2021

Larson Engineering, Inc.
3524 Labore Road
White Bear Lake, MN 55110
(P) 651.481.9120
(F) 651.481.9201
© 2020 by Larson Engineering of Minnesota

I HEREBY CERTIFY THAT THIS PLAN, SPECIFICATION OR REPORT WAS PREPARED BY ME OR UNDER MY DIRECT SUPERVISION AND THAT I AM A DULY LICENSED PROFESSIONAL ENGINEER UNDER THE LAWS OF THE STATE OF MINNESOTA. (LIMITED TO STRUCTURAL DESIGN)

PRINT NAME

SIGNATURE

DATE

REG. NO.

LD. REG. NO.

B&J SEWING FACADE RESTORATION

216 CENTRAL AVENUE NORTH
FARIBAULT, MINNESOTA.

DJ MEDIN architects, inc.
203 n.w. First Ave.
Faribault, MN 55021
507/334-2252

EXTERIOR ELEVATIONS

A1.0

Larson Engineering, Inc.
3524 Labore Road
White Bear Lake, MN 55110-5126
651.481.9120 Fax: 651.481.9201
www.larsonengr.com

Larson

December 14, 2020

Mr. Dave Medin
203 NW 1st Avenue, Suite B
Faribault, MN

Re: B&J Sewing East Wall Inspection
216 Central Avenue North
Faribault, MN
Project No. 11200190

Dear Mr. Medin,

Larson Engineering had conducted a visual inspection of the existing east wall and framing at the above referenced address back in July and recommended further investigation take place once the existing store front had been shored up. On December 14th Larson Engineering conducted a follow-up inspection to further investigate the existing framing.

At the time of the inspection the 3" slurry had been constructed along with thru bolting the beams together and shoring both sets of existing beams. After further measurement the new CMU pier that will be supporting the existing beams shall be a 20" square pier. It was observed that the north unit of the building had the same 2 -inch angle iron welded to the steel beams and fastened to the bottom of the floor joists as the south unit had. It was also observed in the basement that the existing hole in the foundation wall that was infilled with CMU had several voids (See picture 1). The decorative parapet and overhang at the roof was investigated and appeared to be rotting and leaning out way from the building (See picture 2-4). Larson Engineering would recommend the following items below.

1. Remove the existing decorative parapet and overhang so further investigation can take place and a new parapet be framed.
2. Continue the slurry that has already been poured the full length of the east wall to fill existing voids and prevent water infiltration. Dry pack grout in voids that are in the joist cavity where accessibility to pour slurry is not present (See detail D).
3. Construct new 20" Square CMU pier for beam support (See detail B, E, and F).

Please let us know if you have any questions.

Sincerely,
Larson Engineering, Inc.

Brandon Clark, EIT
Design Engineer

Douglas R. Hughes, PE
Structural Principal
MN License #20861

Picture 1: Existing infill in foundation wall with voids.

Picture 2: Existing rusted decorative parapet and overhang.

Picture 3: Existing rotted parapet and overhang framing.

Picture 4: Existing rotted parapet and overhang framing.

Larson Engineering, Inc.
3524 Labore Road
White Bear Lake, MN 55110-5126
651.481.9120 Fax: 651.481.9201
www.larsonengr.com

Larson

SUBJECT B&J SEWING

FARIBAULT, MN

SHEET NO. 1 OF 5
PROJECT NO. 11-20-0190
BY BC DATE 7-21-2020
CHECKED BY:

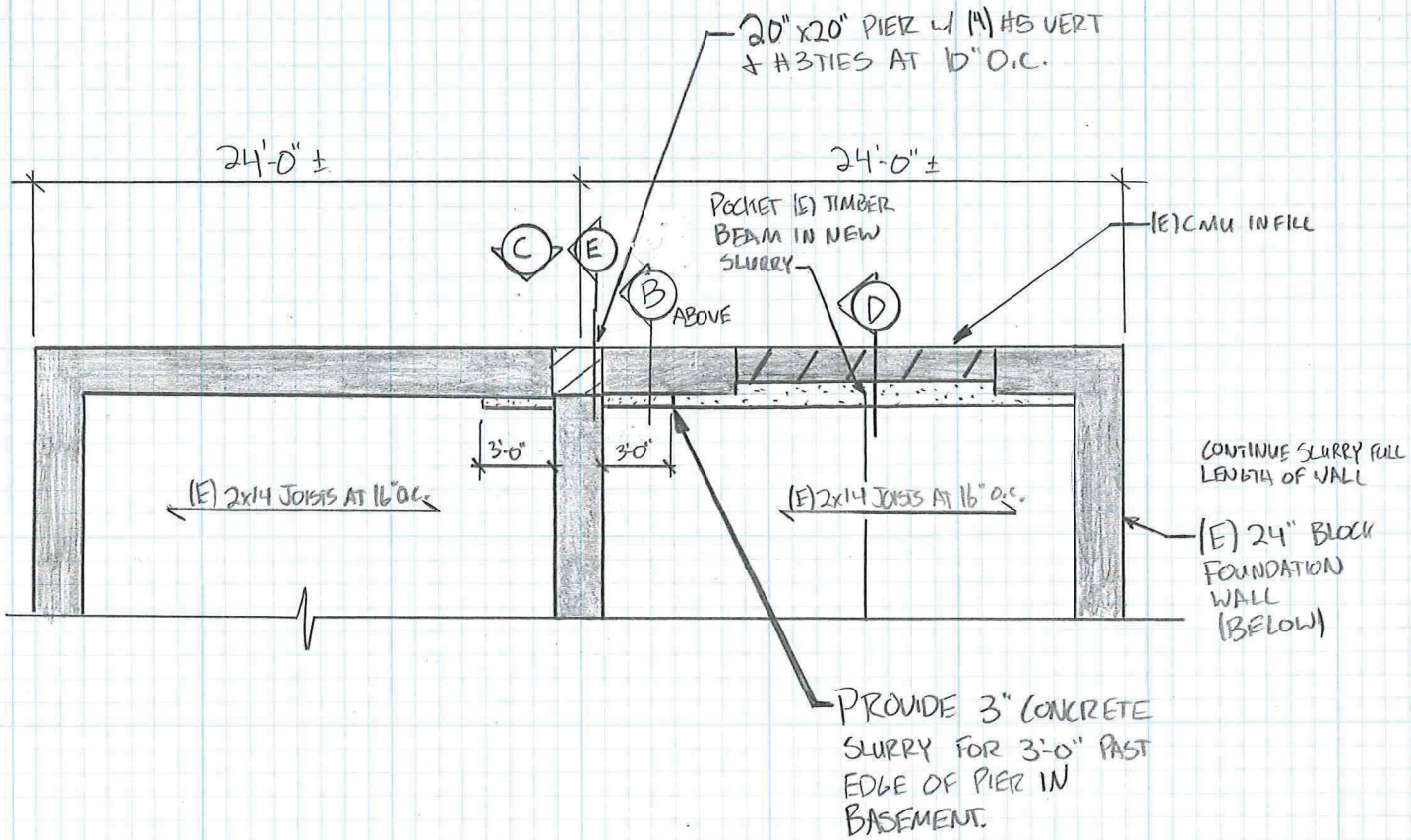

A PARTIAL MAIN FLOOR PLAN
1/8" = 1'-0"

N

NOTES:

1. CONTRACTOR TO VERIFY ALL DIMENSIONS
2. CONTRACTOR TO LOCATE NEW PIER CENTERED ON (E) BLOCK FOUNDATION.

Larson Engineering, Inc.
3524 Labore Road
White Bear Lake, MN 55110-5126
651.481.9120 Fax: 651.481.9201
www.larsonengr.com

Larson

SUBJECT BJ SEWING
FARIBAULT, MN

SHEET NO. 2 OF 5
PROJECT NO. 11-20-0190
BY BC DATE 7-21-2020
CHECKED BY:

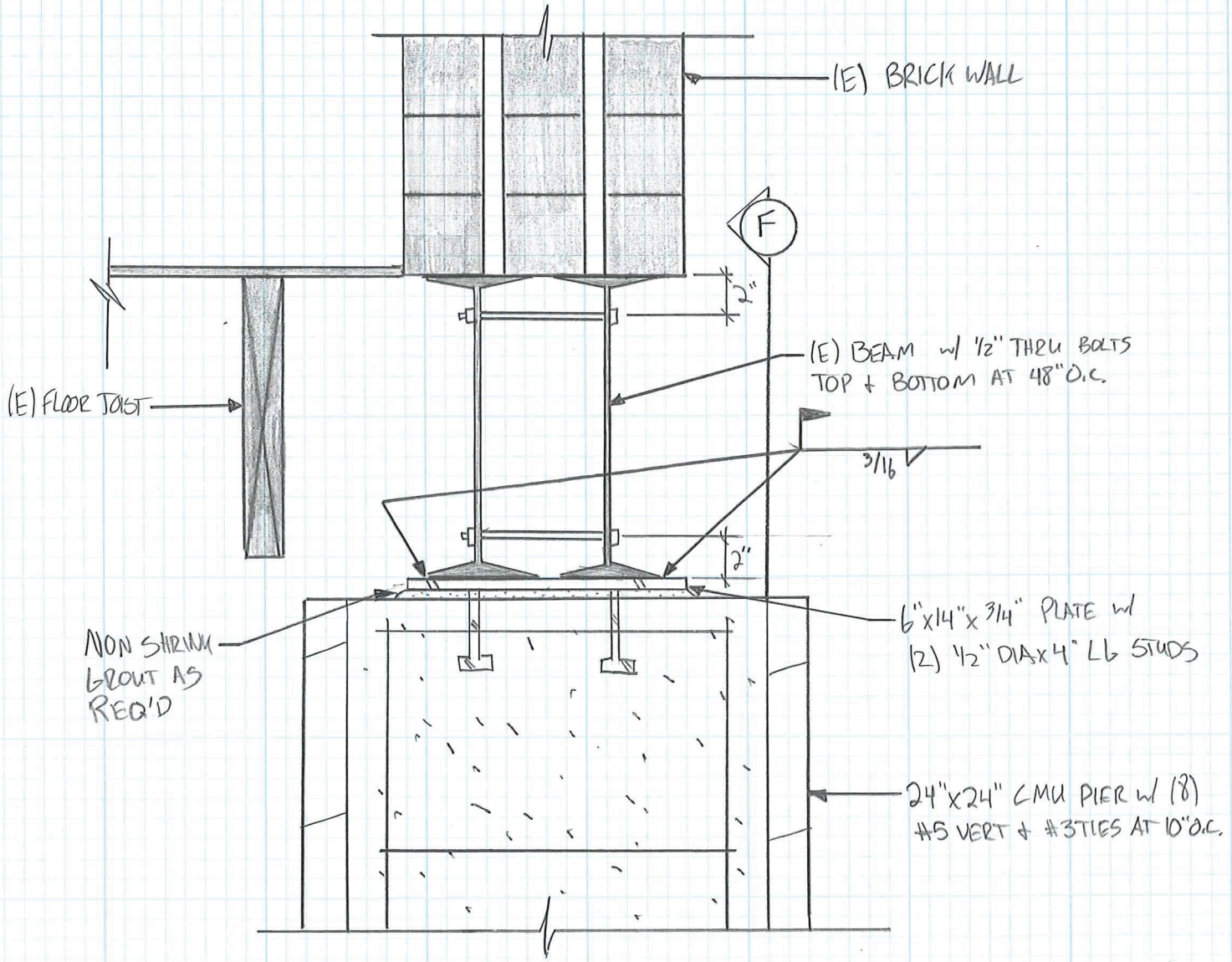

* CONTRACTOR TO LOCATE NEW CMU PIER CENTERED ON (E) 24" FOUNDATION WALL.

B SECTION
1 1/2" = 1'-0"

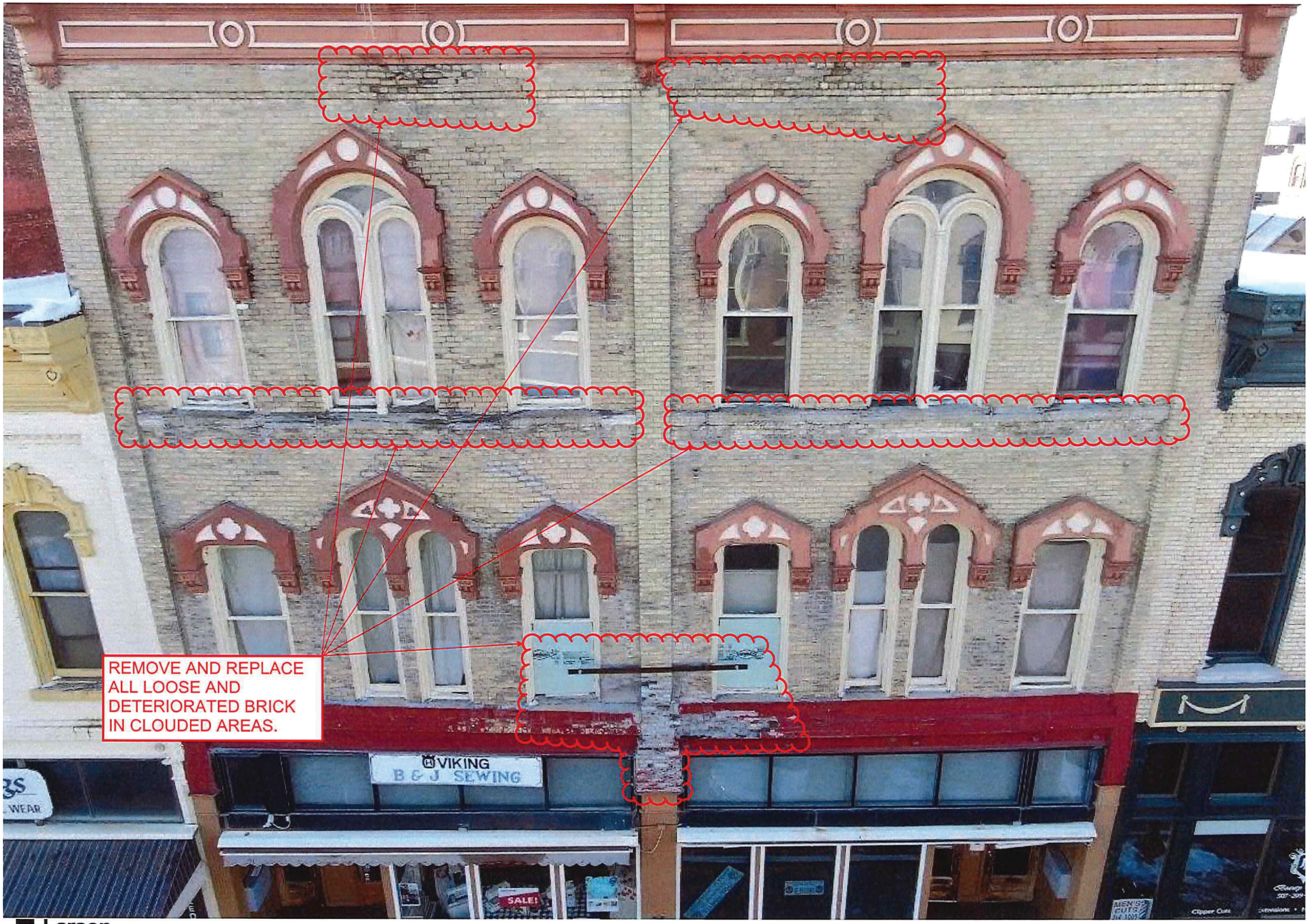

Larson
Engineering
3524 Labore Road
White Bear Lake, MN 55110
651.481.9120 fax: 651.481.9201

C ELEVATION
NTS

Larson Engineering, Inc.
3524 Labore Road
White Bear Lake, MN 55110-5126
651.481.9120 Fax: 651.481.9201
www.larsonengr.com

Larson

SUBJECT B&J SEWING
FARIBAULT, MN

SHEET NO. 3 OF 5
PROJECT NO. 11-20-0190
BY BC DATE 12-14-2020
CHECKED BY:

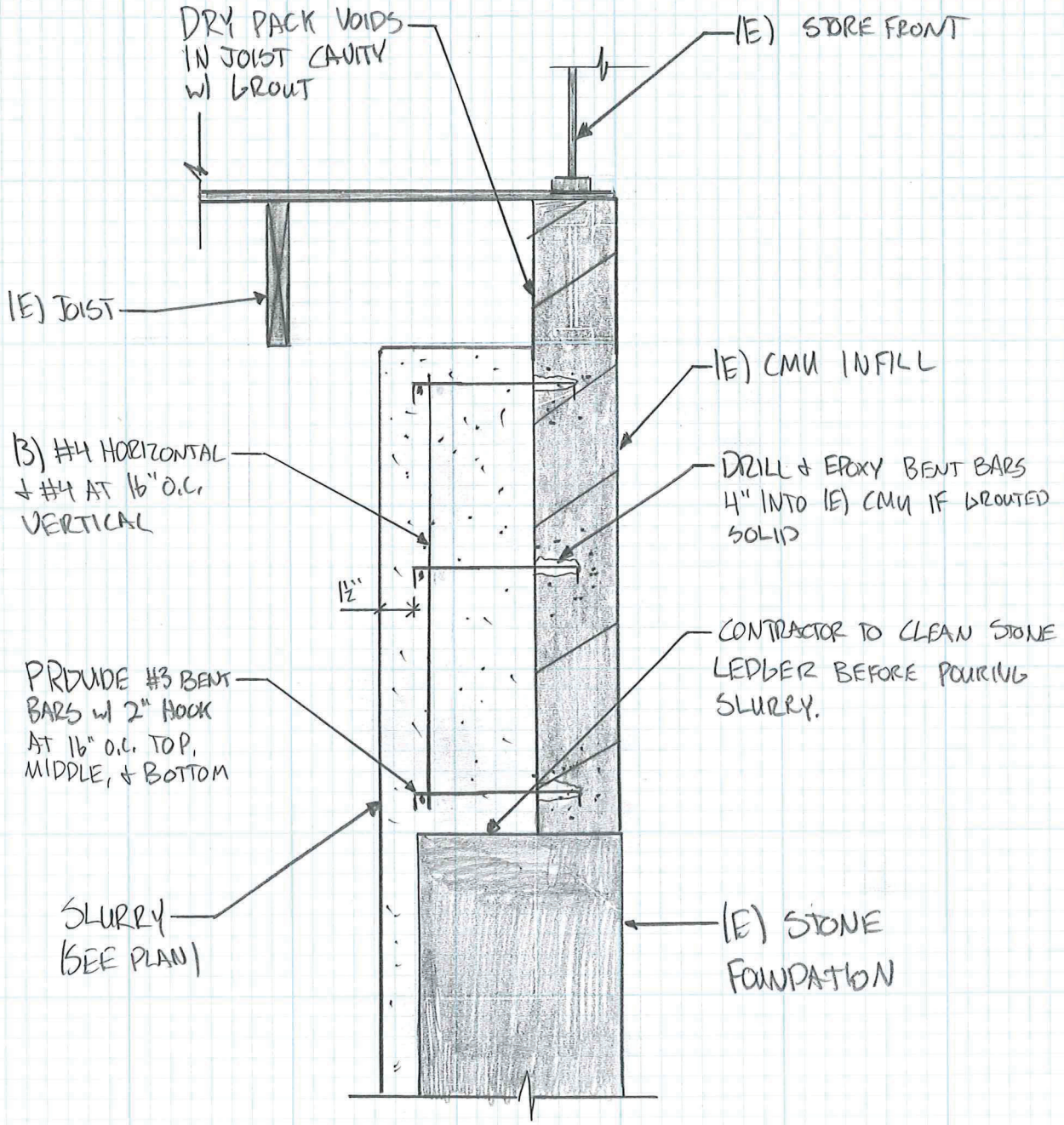

D SECTION
3/4" = 1'-0"

Larson Engineering, Inc.
3524 Labore Road
White Bear Lake, MN 55110-5126
651.481.9120 Fax: 651.481.9201
www.larsonengr.com

Larson

SUBJECT B+J SEWING
FARIBAULT, MN

SHEET NO. 4 OF 5
PROJECT NO. 11-20-0190
BY BC DATE 12-14-2020
CHECKED BY:

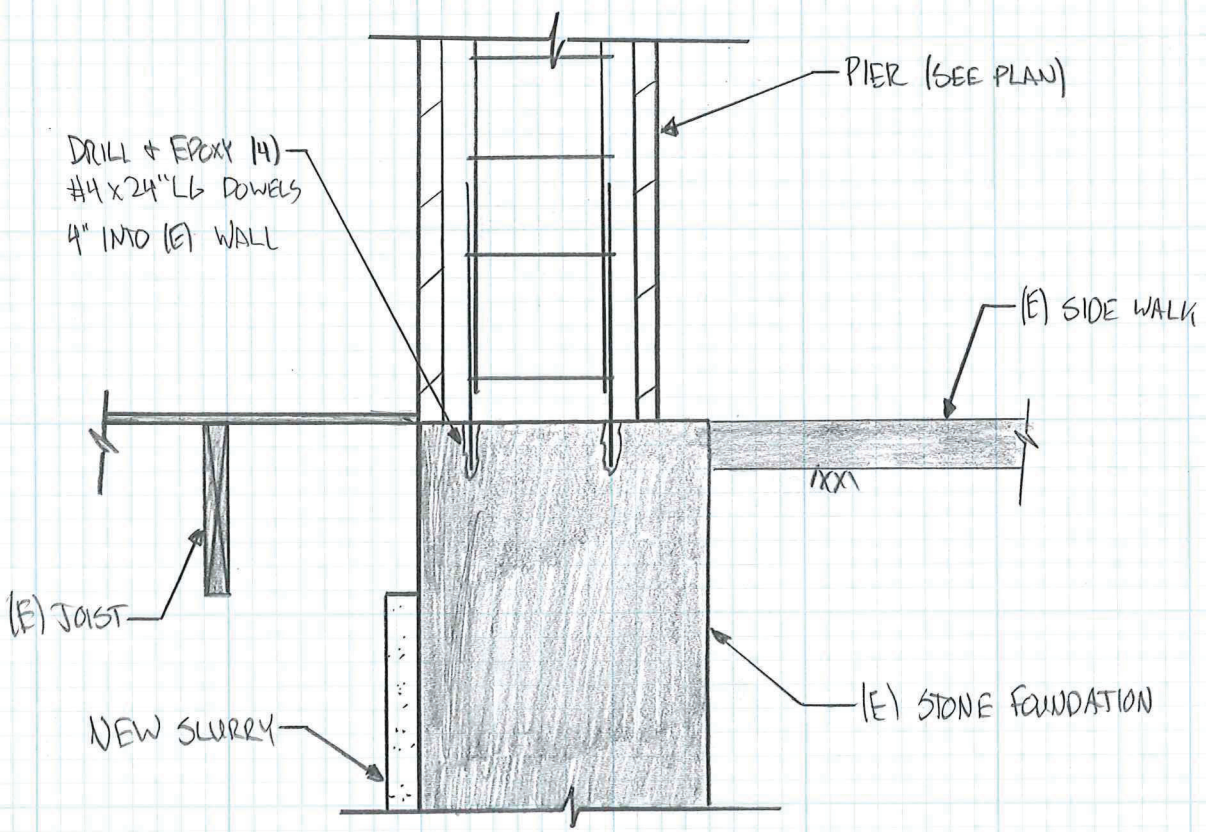

E SECTION
3/4" = 1'-0"

Larson Engineering, Inc.
3524 Labore Road
White Bear Lake, MN 55110-5126
651.481.9120 Fax: 651.481.9201
www.larsonengr.com

Larson

SUBJECT B&J SEWING
FARIBAULT, MN

SHEET NO. 5 OF 5
PROJECT NO. 11-20-0190
BY BC DATE 12-14-2020
CHECKED BY:

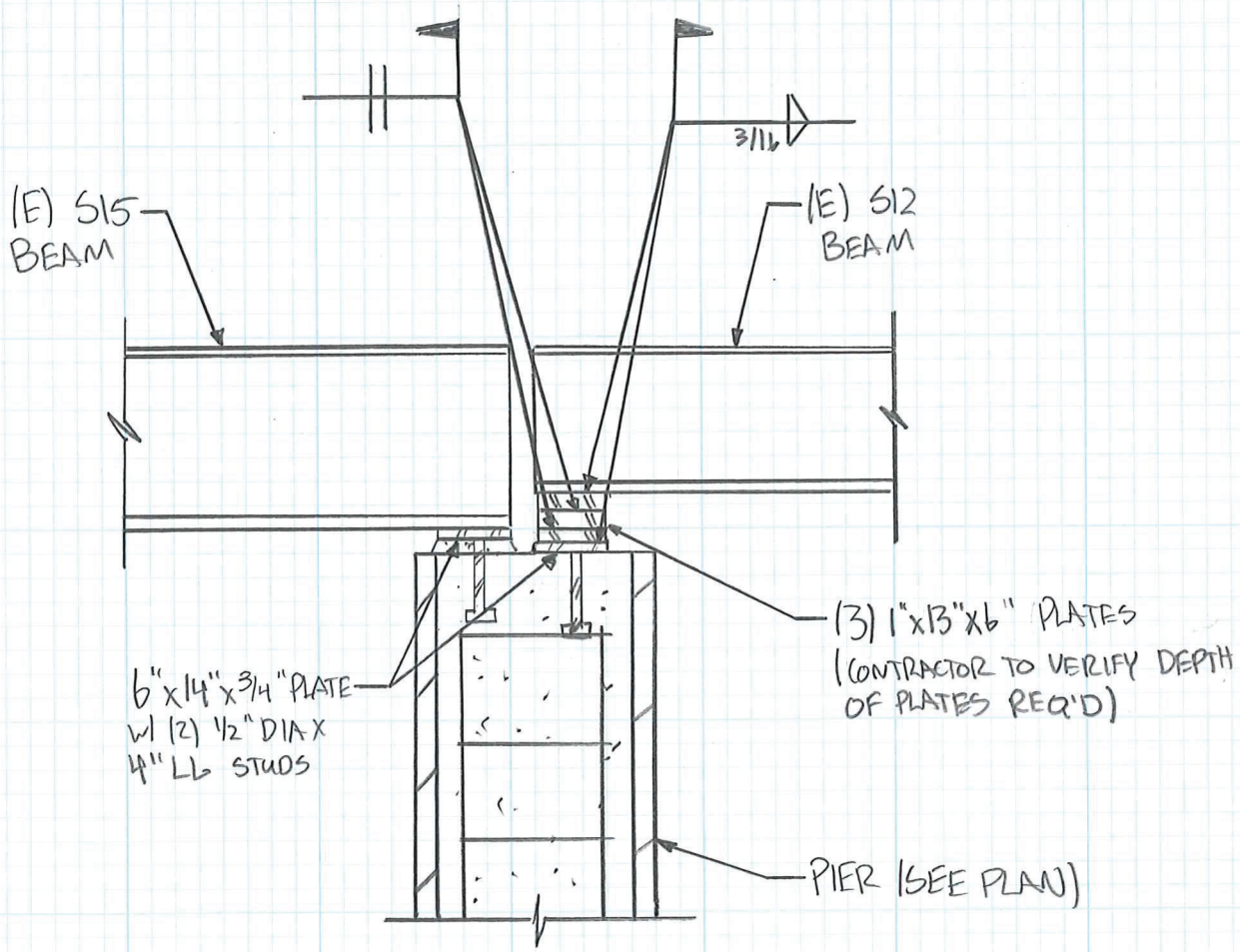

(F) SECTION
3/4" = 1'-0"

Exhibit C

Certificate of Appropriateness
February 2023

DESIGN REVIEW APPLICATION FORM
Heritage Preservation Commission
CERTIFICATE OF APPROPRIATENESS

Site Address: 216-218 Central Avenue North, Faribault, MN 55021

I hereby certify that the Heritage Preservation Commission has reviewed the above-described project and found the work proposed by the applicant to meet or exceed the design guidelines established by the City of Faribault subject to the below listed conditions.

The design features approved by the Heritage Preservation Commission are to be considered a condition of the building permit issued by the City of Faribault as stipulated in the Code of Ordinances.

David Wanberg

David Wanberg, Director of Community & Economic Development

Notes:

1. The building owner or commercial tenant will apply for a sign permit when lettering, graphics, logos, or other identifying content is proposed for the sign panels. This Certificate of Appropriateness does not include approval of any signs.
2. Do not paint brick portions of the facade.
3. Install flashing or other appropriate measures to prevent the intrusion of moisture behind the sign panels.
4. The building owner is responsible for obtaining a building permit and will coordinate with the building official to provide all required materials.
5. Complete all work by June 30, 2023. If an extension is required submit a written request to the Community Development Coordinator by May 31, 2023.

Date of Heritage Preservation Commission Review: 02/15/2023_____
Certificate of Appropriateness Issued: 02/24/2023_____
Expiration Date 02/24/2024_____

Copies forwarded to

Building Official:	X____
Property Owner:	X____
Site File:	X____
SCDP File	_____

City Of Faribault

Request for Action

TO:	Faribault Heritage Preservation Commission
FROM:	Mathias Hughey
MEETING DATE:	February 15, 2023
SUBJECT:	Application to Amend Original Design Certificate for 216-218 Central Ave

BACKGROUND:

On April 19th 2021, the HPC approved a Certificate of Appropriateness for facade repairs to the building at 216-218 Central Ave.

In 2022, the contractor deviated from the approved repair plans by replacing a section of the historic brick facade with concrete masonry units (CMU). This resulted in a dispute between the building owner and the contractor. Due to the ongoing dispute, the building facade repairs as originally proposed were never completed. Specifically, the cleaning and repair of portions of the original brick were replaced with CMU, which does not match in color, texture or material, the original materials of the historic facade.

On January 18th 2023, the HPC voted to find the repairs inconsistent with the original Certificate of Appropriateness and turned the matter over to the City's Planning and Zoning Division to pursue resolution, including, if necessary, enforcement action against the building owner.

On January 24th 2023, the Community and Economic Development Director, City Administrator, City Attorney, and Community Development Coordinator met with the building owner and their attorney to discuss resolution of the situation prior to initiating enforcement actions. The parties agreed that to avoid enforcement action, the building owner would submit an application to amend the original Certificate of Appropriateness to include the following:

1. The CMU will remain (removing it presents a significant structural risk to the integrity of the structure).

2. The CMU, crooked I-beams, and crooked transom windows will be covered with a semipermanent sign board designed and installed to create the appearance of a square and level facade.
3. The sign boards are subject to the downtown sign ordinance, and any exceptions required to meet the intent of disguising the CMU and crooked elements would need to be identified in the application.
4. All appropriate facade elements, including but not limited to the sign boards, windows, window hoods, trim, and cornice will be made or painted to match in color.
5. The installation of the sign boards will require a building permit, and the building owner or their representative is responsible for obtaining all appropriate permits.
6. The City has identified June 30th 2023 as an appropriate deadline for completing the proposed scope of work, and will not pursue enforcement against the building owner for this work, prior to this date. If an extension is required to complete the proposed work, the building owner or their representative will submit a request in writing and document the need for the extension.

Because no lettering, branding, other graphics, or content are proposed for the sign panels, no application for a sign permit is being reviewed at this time.

REQUESTED ACTION:

The Heritage Preservation Commission of the City of Faribault approves the following application to amend the Certificate of Appropriateness for 216-218 Central Ave dated April 19th 2021 to include the attached Application for Certificate of Appropriateness.

ATTACHMENTS:

1. 216 - 218 Central Faribault Revised SIGN BOARDS
2. Design Review Application Form 2023-02-10

Replacement of Historic Sign Panels - colors to match new Building Cornice

216-218 CENTRAL AVE.

FARIBAULT, MINNESOTA

02/08/2023

Multiple Occupancy Building

Building Frontage 42 Feet

* 1. Replacemet of Original Historic Sign Panels

2. Panels to include raised borders

3. Panels to match Colors of Existing Cornice

4. Panels & Borders are Exterior MDO board

Total Area of Sign Panels: 2.2' x 18' = 39.6 sq.ft. x 2 = 79.2 sq.ft.

216-218 CENTRAL AVE.

FARIBAULT, MINNESOTA

02/08/2023

Bohnhoff Design
612-968-5013

DESIGN REVIEW APPLICATION FORM

Heritage Preservation Commission

Site Address: 216-218 Central Avenue North, Faribault, MN 55021

Owner / Applicant:	Darrell Jensen
Mailing Address:	216 Central Avenue North
City/ State:	Faribault, MN 55021
Telephone Number:	(612) 483-0367
Work Site Address:	216-218 Central Avenue North, Faribault, MN
Site File Number:	

Type of Work:				
	Restoration	X	Remodeling	
	New Construction		Site Improvements	
	Demolition			

Brief Description of Project:

1. This application is for proposed changes to the original Certificate of Appropriateness, which include:
   a. The CMU will remain.
   b. Two sign boards will be installed above the clerestory windows, one on either side of the central column, to hide the I-beams, CMU, and out-of-level elements.
      i. The sign boards will be installed so that they are aligned with the lowest upper-corner of the transom windows, in order to camouflage the top of the transom windows that are not level with the ground.
      ii. The sign panels and raised borders will be constructed of exterior MDO board.
      iii. The total proposed square footage for the two sign panels is 79.2 sq. ft., which is less than the allowable 80 sq.ft.
   c. All appropriate façade elements, including but not limited to the sign boards, window hoods, window frames, door frames, etc. will be painted or otherwise made to match the color of the newly constructed cornice.
2. The proposed timeline for completion is June 30, 2023.
3. The sign boards will be constructed in conformance with the downtown Faribault sign guidelines and ordinances in order to meet the intent of.
4. An application for a sign permit is included with this application.

Attachments:		
	Historical Data / Site File Information	N/A
	Photographs	1 photo
	Detailed Drawings of Proposed Modifications	1 drawing
	Site Plan	N/A
	Manufacturers Specifications	N/A
	Material Samples / Color Samples	N/A

Action of HPC Board: Meeting Date: February 15, 2023
Action Taken: _____

Certificate of Appropriateness: Issued: _____
Denied: _____

Note: *If this project is submitted as part of the City's SCDP rehabilitation program, it must receive a "**no adverse effect**" ruling from The State Historic Preservation Office.*

Heritage Preservation Commission

CERTIFICATE OF APPROPRIATENESS

Site Address: 216-218 Central Avenue North, Faribault, MN 55021

I hereby certify that the Heritage Preservation Commission has reviewed the above-described project and found the work proposed by the applicant to meet or exceed the design guidelines established by the City of Faribault.

The design features approved by the Heritage Preservation Commission are to be considered a condition of the building permit issued by the City of Faribault as stipulated in the Code of Ordinances.

_____

David Wanberg, Director of Community & Economic Development

Notes:

Date of Heritage Preservation Commission Review: _____
Certificate of Appropriateness Issued: _____
Expiration Date _____

Copies forwarded to		
	Building Official:	X
	Property Owner:	X
	Site File:	X
	SCDP File	_____

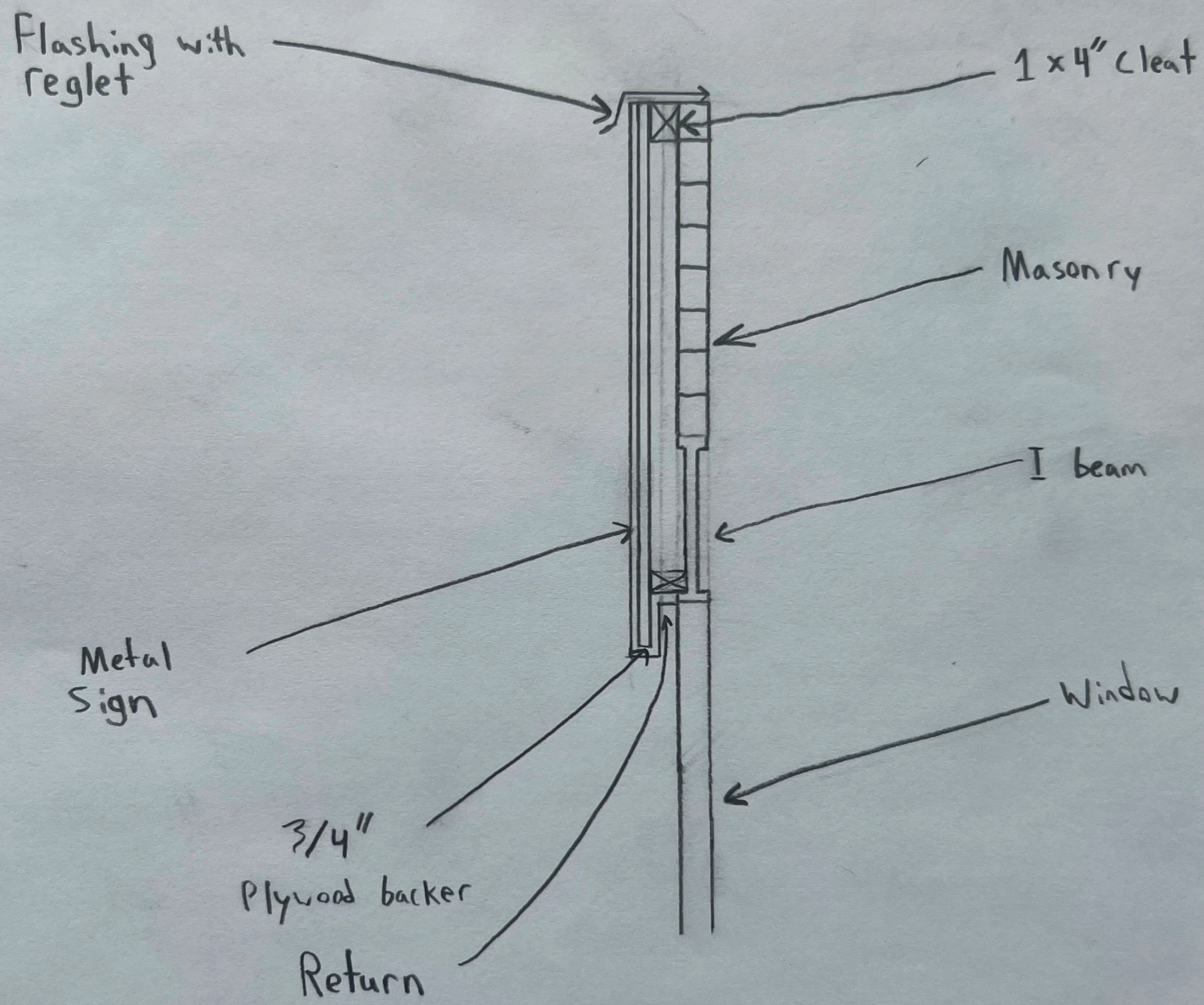

Sign Panel Detail

February 16, 2023

Luella L. Jensen Trust
15835 Bagley Avenue
Faribault, MN 55021-7613

RE: Approved Certificate of Appropriateness Amendment for 216-218 Central Avenue

Dear Luella and Darrell Jensen:

Thank you for meeting with City Staff on January 24, 2023, to address the required exterior repairs to your building at 216-218 Central Avenue. When you complete the required repairs, you will have an important historic building that will serve you well for many years and be a strong asset to downtown Faribault.

This letter provides background on the original certificate of appropriateness, which the Heritage Preservation Commission (HPC) approved on April 19, 2021. More importantly, it outlines the required approval conditions attached to the amended certificate of appropriateness, which the HPC approved on February 15, 2023.

Original Certificate of Appropriateness

On April 19, 2021, the Heritage Preservation Commission approved a certificate of appropriateness for exterior building repairs to 216-218 Central Avenue. While making the required repairs, your contractor discovered significant structural concerns related to the east façade of 216 Central Avenue. Your contractor addressed the concerns by replacing the existing brick immediately above the transom windows at 216 Central Avenue with concrete masonry units scored to resemble brick. However, at its January 18, 2023 meeting, the HPC found the concrete masonry units to be inconsistent with the approved certificate of appropriateness and directed City Staff to seek resolution.

Amended Certificate of Appropriateness

On January 24, 2023, City Staff met with you and your attorney, David Hvistendahl, to discuss an option to amend the certificate of

appropriateness to allow the concrete masonry units to remain at 216 Central Avenue. Subsequently, you submitted a request to amend the certificate of appropriateness. On February 15, 2023, the HPC approved an amendment to the certificate of appropriateness to allow the concrete masonry units above the 216 Central transom windows with the following conditions:

1. Install signboards above the 216 and 218 Central Avenue transom windows:

    - Prepare detailed plans, including materials, dimensions, and flashing. Ensure that the signboards minimize the uneven appearance of the existing transom windows and steel beams above the transom windows. Provide a raised border on all sides of the signboards, and paint the signboards to match the paint on the existing cornice. The Community Development Coordinator must verify in writing that the proposed signboards meet the intent of the HPC's certificate of appropriateness.

    - Obtain a building permit, per the direction of the City's building official, before installing the signboards. Please contact John Rued, Building Official, at jrued@ci.faribault.mn.us or 507-333-0347 for additional information.

2. No brick is to be painted or repainted, and no further cleaning is recommended.

3. Obtain sign permits before installing signs on the signboards or elsewhere on the building.

4. Paint all window trims to match the paint on the existing cornice. The Community Development Coordinator must verify in writing that the proposed painting meets the intent of the HPC's certificate of appropriateness.

5. Complete all required repairs and maintenance outlined in the approved certificate of appropriateness by June 30, 2023. If you cannot meet the deadline, you must submit a written request to the Community Development Coordinator by May 31, 2023, to extend the deadline.

Again, the City appreciates your efforts to repair and maintain 216 and 218 Central Avenue. If you have any questions or comments, please contact me at 507-209-0100 or mhughey@ci.faribault.mn.us.

Sincerely,

Mathias Hughey
Community Development Coordinator

Attachments:

- Exhibit A: Application for Certificate of Appropriateness
- Exhibit B: Illustration of Sign Boards on Façade
- Exhibit C: Dimensional Drawing of Sign Boards
- Exhibit D: Areas to be Painted
- Exhibit E: Approved Certificate of Appropriateness

Copies:

- David Hvistendahl
- David Wanberg, Community and Economic Development Director
- John Rued, Building Official
- Property File

Larson Engineering, Inc.
3524 Labore Road
White Bear Lake, MN 55110-5126
651.481.9120 Fax: 651.481.9201
www.larsonengr.com

Larson

December 21, 2022

Mr. Dave Medin
DJ Medin Architects
203 NW 1st Ave.
Faribault, Minnesota 55021

Re: B&J Sewing Facade Restoration
Faribault, Minnesota
LEMN Project No: 11200190.000

Dear Dave:

I am writing to you in regards to the storefront renovation at the above referenced location and the concern of laying masonry CMU on top of the existing steel lintel beam instead of the original brick.

The two courses of CMU masonry laid on top of the existing steel lintel are structurally adequate for the purposes of renovating the front façade of the building. In my opinion I do not see any concern for having masonry and brick combined and being placed on the lintel.

If you have any further questions regarding this matter, please call me to discuss.

Sincerely,
Larson Engineering, Inc.

Douglas R. Hughes PE
Structural Principal

November 18, 2022

DJ MEDIN architects, inc.

City of Faribault
208 NW 1st Ave
Faribault, MN 55021
Attn: John Rued

Re: B&J Sewing Facade Restoration (Jensen)
Faribault, MN" – Comm. No. 20-006

Dear John:

Rick Thomas got back to me following this week's meeting and indicated that you had some concerns about the two CMU courses that were laid on top of the lintel to replace six courses of disintegrating brick. We would not normally put 'hard' concrete units in with 'soft' brick, but this would be a typical brick on hard bearing surface such as a steel linter. The work was done in increments to avoid dislodging of the remainder of the original brick. This CMU will be covered with a sign board.

If you have any other specific concerns, please let me know so that we can address them.

With Regards,

David J. Medin, Architect
President

Cc: Doug H.
Rick Thomas

203 NW 1st Ave, Suite B, Faribault MN 55021 Ph. 507/334-2252 info@djmedinarchitects.com
Architecture, Interior Design and Space Planning

October 13, 2022

DJ MEDIN architects, inc.

City of Faribault
208 NW 1st Ave
Faribault, MN 55021
Attn: John Rued

Re: B&J Sewing Facade Restoration (Jensen)
Faribault, MN" – Comm. No. 20-006

Dear John:

I am following up on the latest modifications necessary for the stabilization of the Jensen's building brick façade. When the lower two courses of brick were removed to accommodate the installation of new windowsills, several more rows of brick also dropped which resulted in some hasty temporary shoring.

To stiffen up the panels, several courses of six-inch CMU was installed and reinforced and tied back to the structure. They were scored to look like brick and painted. There will be a sign band covering it shortly.

Without completely removing the entire brick façade, it is difficult to know if the remaining brick is stable or not. It would be a good idea to keep a careful watch on the façade for bulging or cracking. Getting the cornice and windows watertight should go a long way to slowing down the damaging freeze/thaw cycle.

With Regards,

David J. Medin, Architect
President

Cc: Doug H.

203 NW 1st Ave, Suite B, Faribault MN 55021 Ph. 507/334-2252 info@djmedinarchitects.com
Architecture, Interior Design and Space Planning

Exhibit D

HPC Update
November 2023

Request for Action

TO:	Faribault Heritage Preservation Commission
FROM:	Mathias Hughey, Community Development Coordinator
THROUGH:	David Wanberg, Community and Economic Development Director
MEETING DATE:	November 15, 2023
SUBJECT:	216 and 218 Central Avenue Update

BACKGROUND:

In October 2023, city staff were notified that the facade repairs to 216 and 218 Central Ave had been completed. The final portion of the project to be completed was the installation of the signboards that were required to mask the crooked I-beams and the unapproved use of concrete masonry units in the repair of the facade. The Community Development Coordinator went to the site to verify the completion of the work and took the attached photos. At that time, the building owner had installed an unpermitted sign. The building owner was notified that the sign was not permitted and advised of possible recourse. The building owner has since removed the unpermitted sign.

REQUESTED ACTION:

The commission may discuss the final product and process. Does the final product meet the intent of the Heritage Preservation Commission's Certificate of Appropriateness? If the goal of the HPC process is compliance with design guidelines and the preservation of a historical aesthetic, how successful was this process? Are there areas where the process could be improved?

ATTACHMENTS:

1. Photo Close
2. Photo Facade
3. Completed Facade

JUKI
elna
JANOME
BERNINA
B&J SEWING
WARNING
Security Cameras In Use
PRIVATE
216
BERNINA
15 MIN PARKING
8:00 AM
TO 7:00 PM
MON-SAT
BERNINA
20% OFF
Sale
husqvarna
VIKING
SALE!

1878
B&J SEWING
BERNINA
SALE

1878

Exhibit E

HPC Meeting Minutes
November 2023

HERITAGE PRESERVATION COMMISSION MINUTES

PUBLIC MEETING ROOM	WEDNESDAY, NOVEMBER 15, 2023	6:00 PM

Meeting Items

1. Call to Order

   Chair Temple called the regular meeting of the Heritage Preservation Commission to order at 6:02 p.m. in the 2nd Floor Library of City Hall. This location was due to scheduling conflicts. Present at the meeting were Cori Weems, David Sauer, Ron Dwyer, Colton Hogan and Chair Sam Temple. Also present at the meeting were Mathias Hughey, Community Development Coordinator, Kari Casper, Administrative Assistant II and Joe Varley.

2. Approval of the Minutes

   Motion by Cori Weems, seconded by Coltan Hogan to Approve. Motion Passed.

3. General Heritage Preservation Items

A. Citizen Comment Period

   None.

4. Design Reviews

A. 322 and 324 Central Avenue

   Sauer stated that he was a bit taken aback by the writers' inclusion of diversity in the preservation movement of which groups were, as she put it underrepresented and has a need to amplify those underrepresented groups in preservation.

   Motion by David Sauer, seconded by Ron Dwyer to Approve. Motion Passed.

B. 216 and 218 Central Avenue Update

   The HPC does not approve of the work at 216 & 218 Central Ave. The CoA issued clearly states that the signboards must cover the Concrete Masonry Units (CMU) that were installed and that they must create the appearance of a “square and level façade.” They felt that the sign boards appeared to be off-center and out of level. The HPC feels that they should re-install the signboards to make sure they are level, centered, and cover the CMU. They were supposed to have this work done in June and it took them until October to get it done. Temple inquired if there was a possibility of using the new "Administrative Citation". Hughey stated that he would speak with David Wanberg and update the HPC at the next meeting.

5. Items for Discussion

A. Relevancy Project

Sauer mentioned that he was surprised about the author's mention of the releavancy of the underrepresented groups in the preservation movement. He would be interested in hearing examples of what she was referring to. Stated that in today's climate, do people care about historical preservation? Temple added that by telling you about the various underrepresented groups, maybe that's a way to get people to care.

B. Commissioner Appointments

Both Commissioners, Cori Weems and Ron Dwyer, whose terms are up have submitted applications for renewal.

C. CLG Annual Report

Hughey prepared the reports for the last two years. The board appreciated looking back at the work that has been done in the past.

6. Adjournment

Motion by Coltan Hogan, seconded by David Sauer to adjourn at 7:08 p.m. Motion Passed.

By:_____
Kari Casper, Recording Secretary

Exhibit F

HPC Rejection of Work Completed Letter
December 2023

January 9, 2024

Darrel and Luella Jensen
15835 Bagley Ave
Faribault, MN 55021

RE: Notice of HPC Findings at **216 and 218 Central Ave**

Dear Darrel and Luella,

The City of Faribault is contacting you regarding the repairs made to the facades of 216 and 218 Central Ave. The Heritage Preservation Commission reviewed the repairs and found that they do not meet the approved scope of work associated with the Certificate of Appropriateness issued on February 24, 2023.

Specifically, the signboards that were installed do not cover the Concrete Masonry Units (CMU) that were installed on 216, and the signboards are not level and square. Because the sign boards are intended to mitigate the visual impact of the CMU and the slumping of the façade, the sign boards will need to be modified or reinstalled to correct this deficiency. See the attached photo for clarification on what should be covered.

The HPC noted that the rest of the work, including the painting, the new cornice, and the repointing is acceptable and commends you on your efforts to restore these historic structures.

This letter serves as official notice that you must correct the deficiencies with the sign boards by **February 1, 2023**. Once the repairs are complete, contact the Community Development Coordinator for verification that the repairs are satisfactory. You will receive written confirmation once the repairs have been accepted.

If you believe this letter was sent to you in error and that the existing repairs are sufficient, please contact me as soon as possible. You have the right to appeal this order to correct the repairs, but you must do so within 30 days of the date of this notice.

We thank you in advance for your attention to this matter. If you have any questions or comments, please feel free to call me at 507-209-0100 or send me an email message at: mhughey@ci.faribault.mn.us.

Sincerely,

Mathias Hughey
Community Development Coordinator

CC: File
Dave Wanberg, C&ED Director
Harry Davis, Planner
Peter Waldock, Zoning Coordinator
John Rued, Building Official

Address: __216 Central Ave_____ Date of Picture: 10/18/2023_____

Exhibit G

Appeal Letter
December 2023

HVISTENDAHL, MOERSCH, DORSEY & HAHN, P.A.

David Hvistendahl ◆ Ronald L. Moersch ◆ Jacqueline A. Dorsey ◆ Mary L. Hahn ◆ Britt Ackerman ◆ Sally M. Silk ◆ Katherine R. Wagner

DAVID HVISTENDAHL
dhvistendahl@hvmd.com

December 22, 2023

Mathias Hughey
Community Development Coordinator
City of Faribault
208 NW 1st Avenue
Faribault, MN 55021

RE: Notice of HPC Findings at 216-218 Central Avenue North, Faribault, Minnesota
Our Client: Darrell Jensen

Mathias,

Our clients received your letter dated December 4, 2023, regarding the Heritage Preservation Commission findings regarding the signboards installed at 216 and 218 Central Avenue North, Faribault, Minnesota. The letter stated that repairs must be made to the signboards to meet the deficiencies stated in the HPC's findings no later than February 1, 2023 [sic].

Your letter also stated that our clients have the right to appeal this order to correct the repairs no later than 30 days after the December 4, 2023, date of your letter. My clients hereby request that the Heritage Preservation Commission findings regarding deficiencies in the signboard repairs be appealed, and that this appeal be placed on the agenda for the Faribault City Council meeting.

Please contact me if you have any questions or need additional information that I can provide.

Thank you.

**HVISTENDAHL, MOERSCH,
DORSEY & HAHN, P.A.**

David Hvistendahl
Attorney at Law

DHv:js

cc: Darrell Jensen *(via US Mail)*

311 South Water Street ◆ P.O. Box 651 ◆ Northfield, MN ◆ 55057-0651 ◆ USA
507-645-9358 ◆ Fax 507-645-9350 ◆ www.hvmd.com

216-218 CENTRAL AVE.

216-218 CENTRAL AVE.

Request for Action

TO:	Faribault Heritage Preservation Commission
FROM:	Mathias Hughey, Community Development Coordinator
THROUGH:	David Wanberg, Director of Community and Economic Development
MEETING DATE:	January 17, 2024
SUBJECT:	Boundary Proposal

BACKGROUND:
See staff report from December 2023.

REQUESTED ACTION:
See staff report.

ATTACHMENTS:
1. Boundary Proposal Report

Request for Action

TO:	Faribault Heritage Preservation Commission
FROM:	Mathias Hughey, Community Development Coordinator
THROUGH:	David Wanberg, Director of Community and Economic Development
MEETING DATE:	December 20, 2023
SUBJECT:	Boundary Proposal

BACKGROUND:

The HPC should prepare a recommendation to resolve the discussion about the local Heritage Preservation District and National Historic Register District boundaries.

In 2022, the National Historic Register District (NHRD) expanded, concluding a process that started almost a decade earlier. Please note a National Historic Register (NHR) designation does not provide protection of historic buildings, as owners may alter, demolish, remodel, or otherwise change their building any way they see fit with the only consequence of potential removal of the NHR designation. Local governments through Heritage Preservation Commissions (HPC) and Heritage Preservation Districts (HPD) are empowered to protect historic structures from demolition or inappropriate alterations.

14 buildings are included in the expanded NHRD but not within the local Heritage Preservation District (HPD). An additional five buildings that are historic and adjacent to the HPD may be suitable for incorporation into the local district.

The HPC's proposed work plan for 2023 included an examination of the boundaries of the HPD. City Council asked several questions that must be addressed in the final district boundary proposal, in addition to targeted engagement with affected property owners.

The first question seeks clarification on why certain buildings that appear significant are not included in the NHRD or the HPD. These buildings could be incorporated into the HPD, and were excluded from the NHR nomination based on SHPO feedback for the following reasons:

28 4th St NE (10,000 Drops) – The NHRD is a commercial district and 28 4th St NE historically served industrial uses. The building was left out of the National District for historical, thematic continuity.

303 1st Ave NE, 112 3rd St NE, 311 Heritage Pl – These buildings include the Rock Island Depot and Depot Square buildings. The Rock Island Depot and Depot Square buildings were left out of the nomination to simplify the geometric boundaries of the district. One building owner indicated they were interested in being included in the HPD.

The City Council's second question is whether the southern boundary of the HPD should be redrawn to match the NHRD, thereby eliminating protection for several commercial and residential properties. The city does not have design guidelines for historic residential properties or a historic residential district. Cities may designate historic residential districts and develop appropriate guidelines for the buildings in those districts separately from commercial districts.
One historic property owner in the HPD responded via phone indicating they were happy to be included in the HPD and took great pride in their historic home. Some building owners find the protection offered by a local designation a compelling reason to invest in building restoration. Faribault is home to many historic homes, both listed and unlisted, with some concentrated in older areas of town and others scattered across the city. The value of and approach to creating residential historic districts should be evaluated as a separate matter.

The NHRD does not include the historic Alexander Faribault House or the Ivan Whitlock Studio building. These buildings would no longer be protected and redevelopment would not be guided by HPD guidelines. Currently, these blocks along 1st Ave NE do not retain their historical character, making the two remaining historic structures outliers, and the street character significantly different from that of Central Ave.

City Council's third question is how affected building owners may respond to removal or inclusion in the HPD. The Community Development Coordinator conducted community outreach and engagement by sending two letters to affected property owners inviting them to participate in an online survey or to reach out in person, through email, or via phone to discuss a potential adjustment of HPD boundaries. Of the 18 affected property owners, three responded to the letters; two by the online survey and one through a phone call.

One owner expressed indifference to inclusion in the HPD. The other two respondents are strongly interested in being included in the local district. One single-family building owner indicated they would prefer to stay in the

HPD.

Options to resolve the matter of adjusting the southern district boundaries include:

1. No change to the boundary line. This option will subject many non-contributing structures to additional scrutiny when applying for building permits, but will not prevent the development of multiple new structures.
2. Adjust to remove buildings with no frontage along Central Ave or all buildings not used for commercial purposes. This option allows guideline application to maintain a cohesive commercial strip along Central Ave and 1st St NE.
3. Align HPD boundary with NHRD boundary. This option removes the 000 block of Central Ave, several historic homes, the Ivan Whitlock Studio, and the Alexander Faribault House Museum.

The options to resolve the northern and eastern boundary include:

1. Loop in only the buildings within the expanded NHRD that have not been demolished.
2. Loop in the buildings included in the expanded NHRD, including the 10,000 Drops building, Depot Square block, and Rock Island Depot building.

The Unified Development Ordinance establishes the HPD and details the process of requesting local historical designation. Historic designation follows a similar process to adopting a zoning amendment, including the HPC making a series of findings to justify inclusion. After HPC, the Planning Commission reviews the request and makes a recommendation to the City Council, which has final authority.

REQUESTED ACTION:

The HPC should discuss the options presented and prepare a recommendation to complete the discussion about the local Heritage Preservation District and National Historic Register District boundaries. The Commission should hold a voice vote on preferred boundaries, and clarify their stated reasons for any proposed changes.

ATTACHMENTS:

1. Historic District Boundaries

City of Faribault
Heritage Preservation Districts

1:3,000
(Print size 8.5"x11")

December 12, 2023

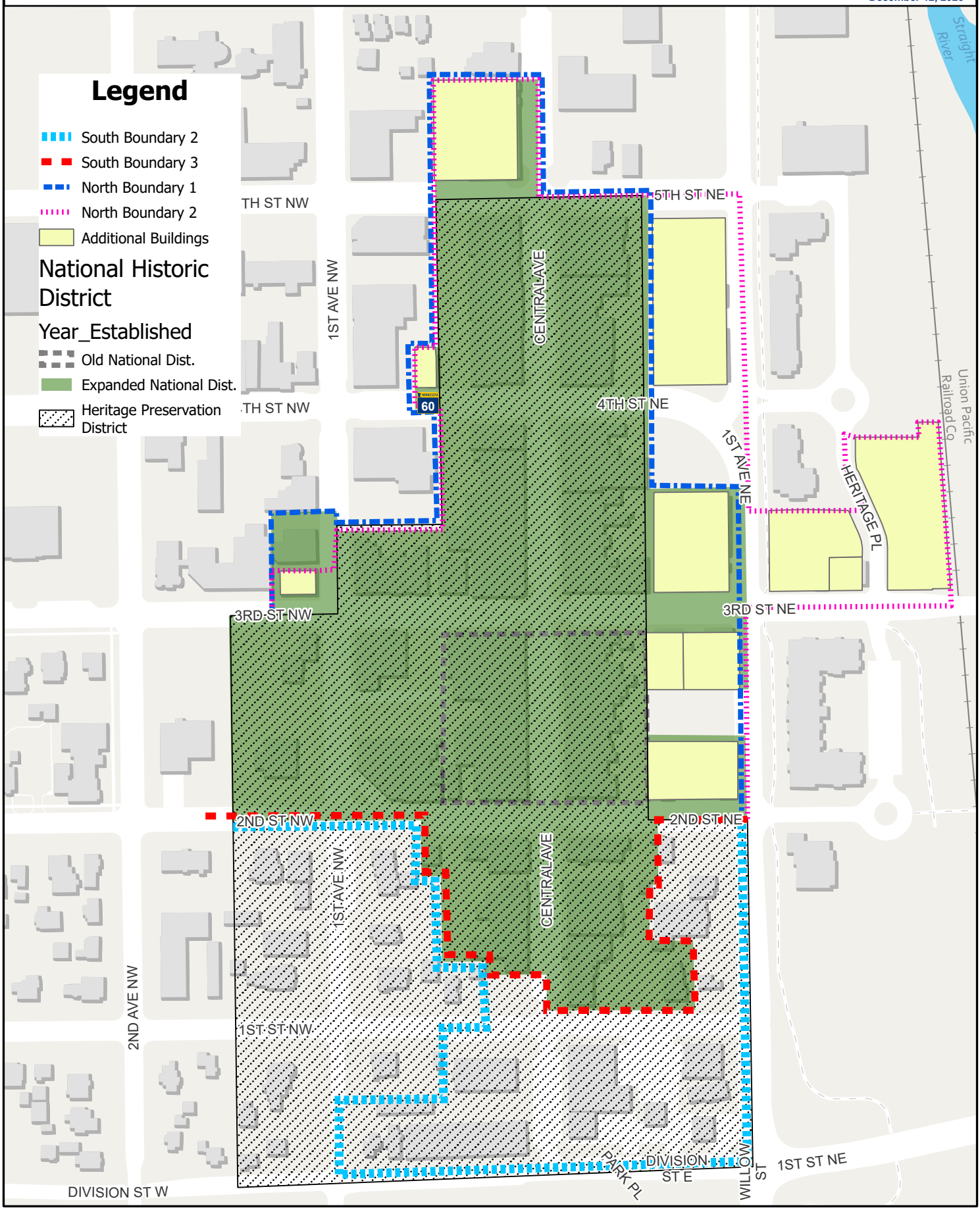

Request for Action

TO:	Faribault Heritage Preservation Commission
FROM:	Mathias Hughey, Community Development Coordinator
THROUGH:	David Wanberg, Director of Community and Economic Development
MEETING DATE:	January 17, 2024
SUBJECT:	Relevancy Project

BACKGROUND:
See staff report from December 2023.

REQUESTED ACTION:
See staff report.

ATTACHMENTS:
1. Relevancy Project Report

Request for Action

TO:	Faribault Heritage Preservation Commission
FROM:	Mathias Hughey
THROUGH:	David Wanberg, Director of Community and Economic Development
MEETING DATE:	December 20, 2023
SUBJECT:	Relevancy Project

BACKGROUND:

Continuing the discussion begun in November, this month, the essay titled "The Culture of Preciousness" is attached. The essay is short and contains questions for discussion at the end.

As a reminder, Bonnie McDonald, President and CEO of statewide nonprofit Landmarks Illinois and immediate past Board Chair of the National Preservation Partners Network was the keynote speaker at this year's Preserve MN conference on Historic Preservation. Her 24-year preservation career includes working for national and state preservation nonprofits, lobbying coalitions, state and local governments, historical societies, and house museums.

Beginning in 2022, Bonnie began a series of essays titled The Relevancy Project that sought to "make visible the problems [she sees] in preservation" with the intent to "join with others to do something about them." After more than 40 years of Heritage Preservation in the Faribault, the city faces many challenges with its historic properties including neglect, deterioration, and demolition. Despite this, Faribault prides itself on its historic properties and downtown commercial district.

REQUESTED ACTION:

Commissioners should read the attached essay, reflect on the included questions, and bring any thoughts for discussion to the meeting.

ATTACHMENTS:

1. The Culture of Preciousness

THE CULTURE OF PRECIOUSNESS

The Frank Lloyd Wright-designed Frederick Bagley House in Hinsdale, Illinois was put on the market by private sale in July 2021 leading preservationists to believe it was being marketed as a teardown. A couple from out-of-state learned about the sale at the 11th hour and purchased the home intent on its preservation. They sought National Register listing, which would make them eligible for Illinois' historic homeowner property tax assessment freeze program. However, the State Historic Preservation Office suggested that the home can't be nominated to the National Register for Historic Places for architectural significance until the replacement aluminum siding is removed that covers the original wood shakes underneath. Photo courtesy of Jean Follett.

JULY 7, 2022
BY BONNIE MCDONALD, PRESIDENT & CEO, LANDMARKS ILLINOIS

A NOTE ABOUT THIS AND FUTURE BLOG POSTS

Blog post topics from here on forward begin to explore, question and challenge longstanding preservation philosophy, pedagogy and practice. Some may find the assertions difficult, irresponsible or even dangerous to the preservation field. Others will be encouraged that these criticisms are getting continued daylight and discussion. All of the ideas you read in this and future blog posts are an aggregate of points raised by The Relevancy Project interviewees. These assertions do not reflect the beliefs and opinions of all interviewees and not everyone will agree with the concerns and conflicts being raised. The project's purpose is to continue to foster inclusive dialogue about our challenges and opportunities in order to help develop solutions that will make preservation relevant to more people.

IT STARTED WITH SOME WINDOWS…

I remember the first time that I felt disappointment and disbelief about preservation practice. The subject of this rising doubt was a long vacant, deteriorating historic building that, because of its original form, had limited reuse options. Many preservationists spent years trying to attract a new user. One finally came along proposing housing units, but that use required installing windows into a windowless brick wall.[1] These windows were necessary for the building's reuse and to comply with building code. The regulatory reviewer determined that the proposed openings didn't meet the Secretary of Interior Standards for Rehabilitation and prevented the project qualifying for Federal Historic Tax Credits. The developer walked away. I too walked away, asking if a windowless wall was worth more than saving the building and providing homes. The reviewer was just doing their job and following the regulatory framework and their training.[2] But, didn't we all become preservationists to save places? Are we missing the forest for the trees?

Herein lies one systemic issue inhibiting preservation's relevance: using integrity as a gatekeeper to designation and incentives puts too much weight on the materiality of significance. If you consider yourself part of the "we" in these blog posts, namely preservation professionals, then you learned that the integrity criterion measures how much original material remains to tell the story of the place's significance. Our practice assesses when these changes cross what is essentially a subjective line of when a property does, or does not, convey its significance – that is, if a person can, or cannot, understand why a place is historic.[3] Inevitably, places change over time, whether actively or passively. Someone could argue that these changes were preservation by investing in the building's material and long-term usability. To that building owner, it could seem counterintuitive that by maintaining or improving the building, it has been ruined for designation purposes. This might seem like an oversimplification, but it is essentially the message that we are delivering. And, when we use the term "integrity" to explain this, it can be offensive to hear your property doesn't have enough to make the cut. It becomes one of the number of narratives used to label preservationists as out of touch with reality, "hysterical preservationists," who are always saying "no" to change. Public opinions matter as they are shared with others, including elected officials and the media.

Our regulations are designed to protect historic material rather than prioritize the needs of people living in and using these places today. We don't expect people to live and work in museum-like settings, so why mandate that places arrive relatively untouched in order to receive protection? According to the National Register for Historic Places criteria for listing, "historic places either retain integrity (that is, convey their significance) or they do not."[4] We leave ourselves no middle ground. This focus on a subjective, yet rigid definition of material integrity turns historic places from things that are venerated

---

[1] For those wanting additional detail, this was what would be labeled a "secondary façade." The windowless wall was designed as such because of its original industrial function. Those labels should have their own discussion

[2] I do want to raise how the reviewer responded to my and others' disbelief, as have regulatory reviewers in other states and at the National Park Service level in other similar scenarios that I heard about in these interviews. Reviewers point to the fact that building owners are not forced to use the Federal Historic Rehabilitation Tax Credit. The credit exists to incent completing a project that complies with the standards, which were codified in 1977 to establish federal preservation practices. Building owners can pursue projects that don't comply with the standards, but without the Federal Historic Rehabilitation Tax Credit as a financial tool.

[3] "The evaluation of integrity is sometimes a subjective judgement, but it must always be grounded in an understanding of a property's physical features and how they relate to its significance." United States Department of the Interior, National Park Service, Cultural Resources. "National Register Bulletin: How to Apply the National Register Criteria for Evaluation." 1997. 44.

[4] Ibid., 44.

for the stories they can tell into things that are precious. This "culture of preciousness" elevates historic material as the deciding factor for what gets saved, and what doesn't.

"We assume the material is telling the story. That's not the case. "

- Relevancy Project interviewee
  January 15, 2021, New York

ISN'T PRESERVATION'S PURPOSE TO SAVE MATERIAL CULTURE?

Preservationists preserve historic places, which are largely material.[5] But why do we do this? Our field originated to preserve history, heritage, and architecture and has evolved to preserve culture, lifeways, identity, memory and story through place. One only need look back at "With Heritage So Rich," the 1966 report of the U.S. Conference of Mayors Special Committee on Historic Preservation that created our current preservation regulatory framework, to see that material culture was not our primary mission:

> "If the preservation movement is to be successful, it must go beyond saving bricks and mortar. It must go beyond saving occasional historic houses and opening museums. It must be more than a cult of antiquarians. It must do more than revere a few precious national shrines. It must attempt to give a sense of orientation to our society, using structures and objects of the past to establish values of time and place... In sum, if we wish to have a future with greater meaning, we must concern ourselves not only with the historic highlights, but we must be concerned with the total heritage of the nation and all that is worth preserving from our past as a living part of the present."
> – With Heritage So Rich, 1966[6]

The culture of preciousness values integrity over significance, which flies in the face of this framing document that was written nearly sixty years ago. If we are truly about saving places and their stories, significance must be considered independent of integrity. That is, the stories that took place in a building and about its design or construction, are present even if original materials and details are compromised. If our charge is to preserve "the total heritage of the nation", then significance must be inclusive of all people who are, and have been, on this land. For places to be "a living part of the present," then adherence to a strict integrity standard, as it is currently interpreted, is incongruous. For a place to be "living" it must evolve to meet present needs. Material changes that happen over time are a part of the story. The presence of changes that reflect a building's evolution should not prevent its historic designation; in fact, they enrich the building's story.

"The value of a community is not based on the material of the buildings or places they lived. Don't value the materials over the history of that place."

- Relevancy Project interviewee
  September 11, 2020, Virginia

---

[5] For the purposes of this discussion, I am referring to our designed and built environment while recognizing that we also work to preserve intangible culture and heritage, natural and sacred landscapes and resources below ground level.

[6] United States Conference of Mayors Special Committee on Historic Preservation. "With Heritage So Rich." Originally published by Random House, New York, 1966, reprinted by the National Trust for Historic Preservation, 1999. 193-194.

The culture of preciousness also perpetuates a lack of inclusion and equity in preservation. Properties that do not meet the integrity standard are not designated and are ineligible for incentives like historic preservation tax credits. We also know that low-income homeowners can be negatively impacted by the requirements for like-designed replacement materials for locally designated properties if the guidelines are inflexible or omit claims of economic hardship. The Harvard Joint Center for Housing Studies tabulated results from the Department of Housing and Urban Development's 2019 American Housing Survey. Amongst their findings are that repairs and improvements made by low-income homeowners represent three times as much of their income as higher-income homeowners.[7] Preservationists must work together with homeowners to ensure affordable building operations, maintenance and hazardous material remediation.[8] For property owners that are under-resourced, local designation should be accompanied by more flexible replacement guidelines, free or affordable financing for maintenance and improvements and accessible information about the permitting process and other resources. Preservation will continue to be irrelevant, or a threat, to under-resourced property owners and renters if they are not engaged in the designation process, if the designation increases maintenance costs or triggers code enforcement without any accessible financial incentives, or if the designation brings no tools to prevent gentrification and displacement.

"When we get so precious, we lose a connection."

- Relevancy Project interviewee
  November 14, 2019, Washington

To be seen as relevant, preservation has to move beyond the culture of preciousness to put greater priority on the people interacting with historic places today and tomorrow.

Your thoughts on this and forthcoming topics are not only welcomed, they're imperative to ensuring this project is inclusive, with well-considered outcomes. So post away on Landmarks Illinois' Facebook and Twitter feeds and my LinkedIn page (blog comments are not enabled)! I'll collect and consider your comments to inform future blog posts and the project's outcomes published in the forthcoming Relevancy Guidebook to the U.S. Preservation Movement (working title).

DISCUSSION QUESTIONS

1. How would you characterize preservation's culture? What aspects of the work are prioritized and should they be?
2. Do you believe that historic places are treated as precious? Is the way that we assess, review and preserve historic places appropriate? How would you do this work differently?
3. What is gained and what is lost by the culture of preciousness?
4. How could the preservation designation process work differently?
5. Could preservation practice remain legally defensible without a strict integrity criteria?

---

[7] Wedeen, Sophia. "Home Repairs and Updates Pose Considerable Burdens for Lower-Income Homeowners." Harvard Joint Center for Housing Studies, June 16, 2022.

[8] Two homeowner assistance programs in Illinois are worth noting. The statewide Historic Residence Assessment Freeze program helps defray increased tax assessments for after homeowners make property improvements for a 12-year period. In Chicago, Landmarks Illinois also supported successful pilot legislation allowing accessory dwelling units as a way to generate income and increase affordable housing availability without demolition.

6. Can there be a more nuanced approach that still preserves historic places and tells their stories while also ensuring today's user has an affordable, accessible, safe, comfortable place that reflects their own identity and culture?
7. If we shifted our focus to people living in a place today, how would preservation be different?

HERE ARE SEVERAL IDEAS RAISED BY INTERVIEWEES FOR TACKLING THIS ISSUE

- Follow the work of Beyond Integrity, a coalition of advocates in Seattle and King County, Washington, looking for more equitable preservation practices.
- Reevaluate the assessment measurements for the integrity criteria using a justice-based design framework such as the Just City Index, designed by the Harvard University Graduate School of Design.
- Consider a sliding integrity scale, especially for properties listed under National Register of Historic Places Criteria A and B.
- Study heritage conservation designation criteria across the globe to identify and assess other methods.
    - Consult the 1994 International Council on Monuments and Sites (ICOMOS) Nara Document on Authenticity. The document affirms, "All judgements about values attributed to cultural properties as well as the credibility of related information sources may differ from culture to culture, and even within the same culture. It is thus not possible to base judgements of values and authenticity within fixed criteria. On the contrary, the respect due to all cultures requires that heritage properties must be considered and judged within the cultural contexts in which they belong."[9]
    - The Canada Register of Historic Places designation process requires that a Commemorative Integrity Statement (CIS) be completed as part of the nomination process. The CIS helps to establish one of the nation's listing criterion, which is that the resource and its respective associated values are "respected." This criterion appears to provide awareness around the need for flexibility on the issue of integrity for properties not in good condition. "In the case of resources not in good condition, respect means efforts to enhance the condition of the resources and associated values are based on the historic values of the resources. This outcome places attention on the state of the resource itself."[10] Canada also includes in its "Standards and Guidelines for the Conservation of Historic Sites in Canada," a conservation decision-making process that includes developing an understanding of the site that includes its "evolution over time," "past and current importance to its community," "traditional practices associated with the historic places" and "the interrelationship between the historic place, its environment and its communities should also be considered."[11] This dedication to looking at the place could be a relevant model.
    - Patrice Frey in her February 8, 2019 Bloomberg CityLab article, "Why Historic Preservation Needs a New Approach," referenced Historic England's gradient designation system as an example.

---

[9] International Council on Monuments and Sites. "The Nara Document on Authenticity." Nara, Japan, 1994. 47.
[10] The National Parks and National Historic Sites of Canada. "Guide to the Preparation of Commemorative Integrity Statements." February 2002. 14.
[11] Canada's Historic Places. "Standards and Guidelines for the Conservation of Historic Places in Canada." Her Majesty the Queen in Right of Canada, 2010. 3.